SIOUX AUTOMATION CENTER

VM600027 Rev Q 12/21/20

MAXI-MIXER
3600 SERIES TRAILER VERTICAL AUGER
OPERATORS MANUAL

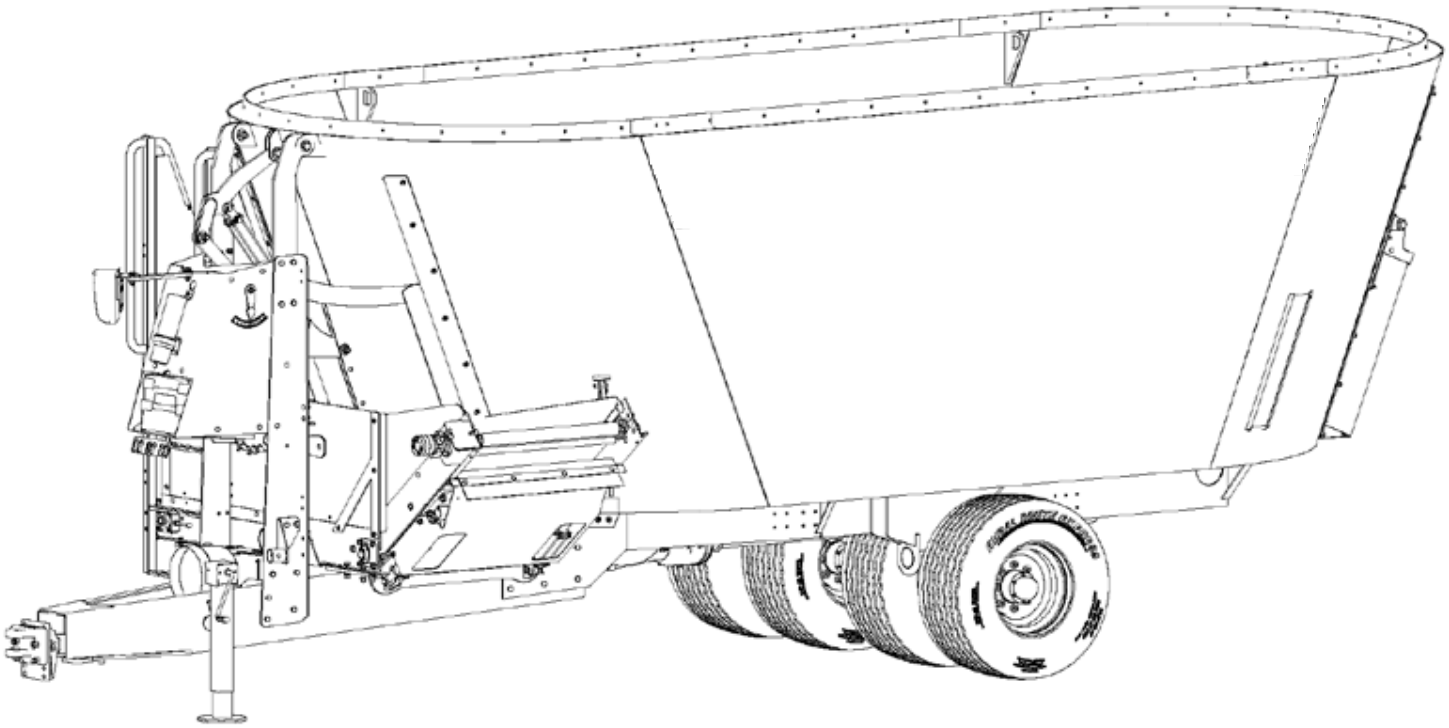

OPERATION
REPLACEMENT PARTS

READ complete manual CAREFULLY
BEFORE attempting operation.

877 1st Ave. N.W. | Sioux Center, IA 51250 | Toll Free: 1.866.722.1488 | siouxautomation.com

REV	DATE	BILL OF MATERIALS	DESCRIPTION
A	10/22/15	VM900236, 237, 238, 238	UPDATED SCALE KITS
B	12/11/15		UPDATED CHAIN ASSY P/Ns IN ALL DISCHARGES, ADD NOTE FOR KNIFE KIT QUANTITIES
C	02/18/16	DECALS - ADD SAC SPECIFIC DECALS (PAGE 12); ADD FINAL TRAILER ASSEMBLY INFORMATION CONSOLIDATED MANY BILLS OF MATERIALS AND UPDATED 2 SPEED GEARBOX INFORMATION.	PAGE 56 - ADD NOTE ABOUT OPTIONAL SKID PLATE VM700328 THAT FITS OVER EXISTING SKID PLATE ADDED AUGER FLANGE AND BLADE INFORMATION
D	4/4/16	ADDED : VM900364	HD REPLACEMENT JACK
E	8/09/16	VM800099 DELETED : VM900364 ADDED VM800305	REPLACED 8 BOLT HUB ASSEMBLY VM800298 WITH VM800099 (PAGE 98) ADDED PART NUMBERS TO TIRE ASSEMBLIES HD REPLACEMENT JACK 1.3:1 GEARBOX BREAKDOWN (PAGE 87)
F	9/27/16		UPDATED DECALS AND LOCATIONS
G	3/7/17	REVIEWED ALL BOMS	UPDATED ALL ASSEMBLY BOM'S AS NEEDED ALSO DELETED UNUSED 2 SPEED GEARBOX BREAKDOWNS.
H	8/24/17	VM900376, FINAL TRAILER ASSEMBLY OPTIONS, ADDED VM800332 PTO BREAKDOWN. VM900321-3, VM900322-3	UPDATED TWO SPEED GEARBOX INFORMATION ALONG WITH 2 SPEED SHIFTER INFORMATION UPDATED KNIFE KITS
J	9/27/17	PAGE 34 & 58	ADDED DISCHARGE CHAIN INSTALLATION IILUSTRATION AND NOTES.
K	11/22/17	PAGE 85	REMOVED 2 SPEED OPTION TABLE AND ADDED THE 2 SPEED GEARBOX PART NUMBERS TO EXISITNG TABLE OF DRIVELINES
L	4/12/18		ADD 48" CONVEYOR PART INFORMATION UPDATE 2 SPEED GEARBOX INFORMATION
N	5/23/19	PAGE 56 AND 73	UPDATED LOCATION OF ARROW ON CHAIN GUARD UPDATED HYD HOSE ROUTING ON DRAWING
P	10/16/20	PAGE 99	STUD KIT VM800111 WAS VM800103
Q	12/21/20	WHEEL MAINTENANCE PAGE 42	ADD TIGHTEN LUG NUTS WEEKLY - AS PART OF WHEEL MAINTENANCE

TABLE OF CONTENTS

Introduction, General and Contact Information 4
Customer Reference Information 5
Safety Symbols and Signal Words 6
Guidelines, Lighting and Marking 7
Sign Care, Sign Locations 8-12
Hydraulic, Maintenance 13
Tire Saftety, Before Operation 14
During Operation 15
Following Operation, Transport Operations 16
Following a Maintenance Schedule 17
Performing Maintenance 18
Bolt Torque Data 19
PTO Requirements 20
Draw Bar Attaching 20
Hydraulic System 20
Pre-Operation Check List 20
Mixer Setup 21
Mixer Operation 22-27
Inspection and Adjustments 28
Fluids and Lubricants 29-33
Conveyor Maintenance 34-35
Planetary Gearbox 36-39
Auger Maintenance 39
Greasing 40-41
Wheel Maintenance 42
Final Trailer Assemblies and Options 43-44
Ladder Assemblies 45
Front Frame Assembly 46-47
Hitch and Discharge Door Assemblies 48-49
Auger Assemblies 51
Installing Replacement Augers 52
Knife Assemblies 53
Restrictor Blade and Viewing Window 54
Discharge Assemblies 55-73
Gearbox Lubrication System 74
Grease Line Assembly 75
Planetary Gearbox Bearings & Seals 76
Driveline Assemblies 77-80
Driveline Conversion Kits 81-82
2-Speed Gearbox Breakdown 83
Remote Shifter Kit 84
PTO Reference Chart 85
PTO Assemblies 86-91
Walking Beam Assembly 92
Axle and Wheel Hub Assemblies 93-98
Tail Light and Scale Kits 99
Rubber Tub Extension Kits 100
Maxi-Mixer Specification Chart 101
Warranty 102
Scale Warranty 103

INTRODUCTION

Thank you for choosing Sioux Automations 3600 Series Vertical Mixer to complement your operation. This equipment has been designed and manufactured to meet the needs of the discriminating buyer for efficient cutting, mixing and feeding.

Safe, efficient and trouble free operation of your mixer requires that you and anyone else who will be operating or maintaining the machine, read and understand the Safety, Operation, Maintenance and Troubleshooting information contained within the Operator's Manual.

This manual covers the 3600 Series Single Auger Models by Sioux Automation Center. Keep this manual readily available for reference and be sure to pass it on to new Operators or Owners. Contact your nearest Sioux Automation Center Dealer or Distributor if you need assistance or information.

WARNING: TO AVOID PERSONAL INJURY OR DEATH, OBSERVE FOLLOWING INSTRUCTIONS:

Never overload wagon. Rating of gear or rating of tires, whichever is less.

Ensure that anybody present is clear before applying power to any machinery used in conjunction with wagon box or when moving box.

Never allow anyone in, near, or on mixing chamber during mixing, transporting, or unloading of feed.

Do not exceed 10 miles per hour when towing wagon.

GENERAL INFORMATION

1. Unless otherwise specified, high-strength (grade 5) (3 radial-line head markings) hex head bolts are used throughout assembly of this piece of equipment.

2. Whenever terms **"LEFT"** and **"RIGHT"** are used in this manual it means from a position behind wagon box and facing forward.
3. When placing a parts order, refer to this manual for proper part numbers and place order by **PART NO. and DESCRIPTION.**

4. Read assembly instructions carefully. Study assembly procedures and all illustrations before you begin assembly. Note which parts are used in each step. This unit must be assembled in proper sequence or complications will result.

CONTACT INFORMATION

Contact Sioux Automation Center, Inc. at:

877 1st Ave NW
Sioux Center, IA 51250

Phone:	**(712) 722-1488**
Toll Free	**(866) 722-1488**
Fax:	**(712) 722-1487**
Website:	**www.siouxautomation.com**

SERIAL NUMBER LOCATIONS

Always give your Dealer the Model Number and Serial Number of your Sioux Automation Center 3600 series mixer when ordering parts or requesting service or other information. Depending on the type of service, the Serial Numbers of individual components and/or assemblies will be required. The Serial Number location required for servicing your mixer is shown in Figure 1. For easy reference, please write this information in the Customer Reference Information section that follows.

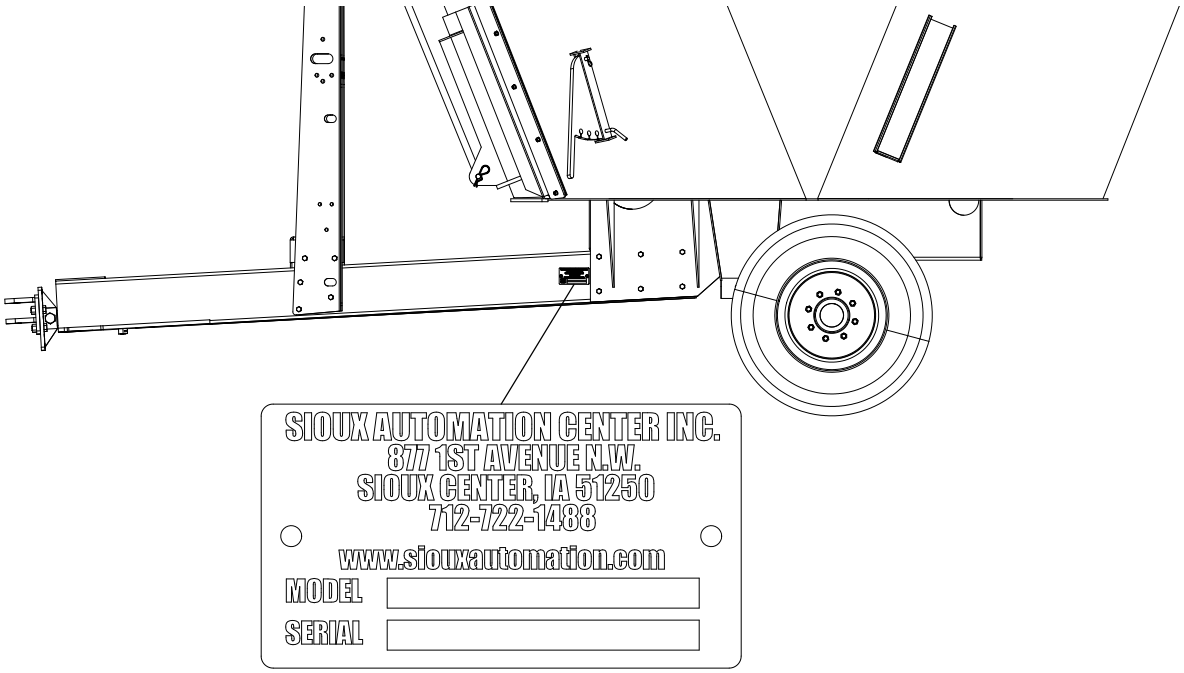

Figure 1 Serial Number Location

CUSTOMER REFERENCE INFORMATION

Model Number:_____ Serial Number:_____
Dealer Name:_____Dealer Phone:_____
Scale Indicator Model Number:_____
Scale Indicator Serial Number:_____
Remote Scale Indicator Serial Number:_____
Other Main Components:_____
(e.g. Gearboxes, Hydraulic Motors, etc.) _____

SAFETY

TAKE NOTE! THIS SAFETY ALERT SYMBOL FOUND THROUGHOUT THIS MANUAL IS USED TO CALL YOUR ATTENTION TO INSTRUCTIONS INVOLVING YOUR PERSONAL SAFETY AND SAFETY OF OTHERS. FAILURE TO FOLLOW THESE INSTRUCTIONS CAN RESULT IN INJURY OR DEATH!

THIS SYMBOL MEANS

ATTENTION

BECOME ALERT

YOUR SAFETY IS INVOLVED!

SIGNAL WORDS

Note: use of following signal words **DANGER**, **WARNING**, and **CAUTION** with safety messages. Appropriate signal word for each has been selected using following guidelines:

DANGER:

Indicates an imminently hazardous situation that, if not avoided, will result in serious injury or death. This signal word is to be limited to most extreme situations typically for machine components which, for functional purposes, cannot be guarded.

WARNING:

Indicates a potentially hazardous situation that, if not avoided, could result in serious injury or death, and includes hazards that are exposed when guards are removed. It may also be used to alert against unsafe practices.

CAUTION:

Indicates a potentially hazardous situation that, if not avoided, may result in minor or moderate injury. It may also be used to alert against unsafe practices.

SAFETY...YOU CAN LIVE WITH IT

EQUIPMENT SAFETY GUIDELINES

YOU are responsible for the **SAFE** operation and maintenance of your 3600 series mixer. **YOU** must ensure that **YOU** and **ANYONE** else who is going to operate, maintain, or work around the mixer be familiar with the operating and maintenance procedures and related SAFETY information contained in this manual. This manual will take you step-by-step through your working day and alerts you to safety practices that should be adhered to while operating the machine.

Remember, **YOU** are the key to **SAFETY**. Good safety practices not only protect you but also the people around you. Make these practices a working part of your safety program. Be certain that EVERYONE operating this equipment is familiar with the recommended operating and maintenance procedures and follows all the safety precautions. All accidents can be avoided. Do not risk injury or death by ignoring good safety practices.

- Vertical Mixer owners must give operating instructions to operators or employees before allowing them to operate the machine, and at least annually thereafter.
- The most important safety device on this equipment is a **SAFE OPERATOR**. It is the operator's responsibility to read and understand **ALL** Safety and Operating instructions in the manual and to follow them.
- Sioux Automation Center, Inc. feels that a person who has not read and understood all operating and safety instructions is not qualified to operate the machine. An untrained operator exposes himself and bystanders to possible serious injury or death.
- Do not modify the equipment in any way. Unauthorized modification may impair the function and/or safety and could affect the life of the equipment.
- Think SAFETY! Work SAFELY!

In order to provide a better view, certain illustrations in this manual may show an assembly with a safety shield removed. However, equipment should never be operated in this condition. Keep all shields in place. If shield removal becomes necessary for repairs, replace shield prior to use.

Replace any caution, warning, danger or instruction safety decal that is not readable or is missing. Location of such decals is indicated in this booklet.

Do not attempt to operate this equipment under the influence of alcohol or drugs.

- Only trained competent persons shall operate the Vertical Mixer. An untrained operator is not qualified to operate the machine.
- Have a first-aid kit available for use should the need arise and know how to use it.
- Provide a fire extinguisher for use in case of a fire. Store in a highly visible place.

LIGHTING AND MARKING

It is the responsibility of customer to know lighting and marking requirements of local highway authorities and to install and maintain equipment to provide compliance with regulations. Add extra lights when transporting at night or during periods of limited visibility.

Lighting kits are available from your dealer or from manufacturer.

SAFETY SIGN CARE

- Keep safety signs clean and legible at all times.
- Replace safety signs that are missing or have become illegible.
- Replaced parts that displayed safety signs should also display current safety signs.
- Safety signs are available from your distributor, dealer parts department, or factory.
- How to install safety signs.
- Be sure that installation area is clean and dry.
- Decide on exact position before you remove backing paper.
- Remove smallest portion of split backing paper.
- Align decal over specified area and carefully press small portion with exposed sticky backing in place.
- Slowly peel back remaining paper and carefully smooth remaining portion of decal into place.
- Small air pockets can be pierced with a pin and smoothed out using piece of decal backing paper.

SAFETY SIGN LOCATIONS:

Types of decals and safety signs with locations are shown in illustration below. Good safety requires that you familiarize yourself with the various decals, type of information provided, and the areas that require your awareness.

SAFETY SIGN LOCATIONS

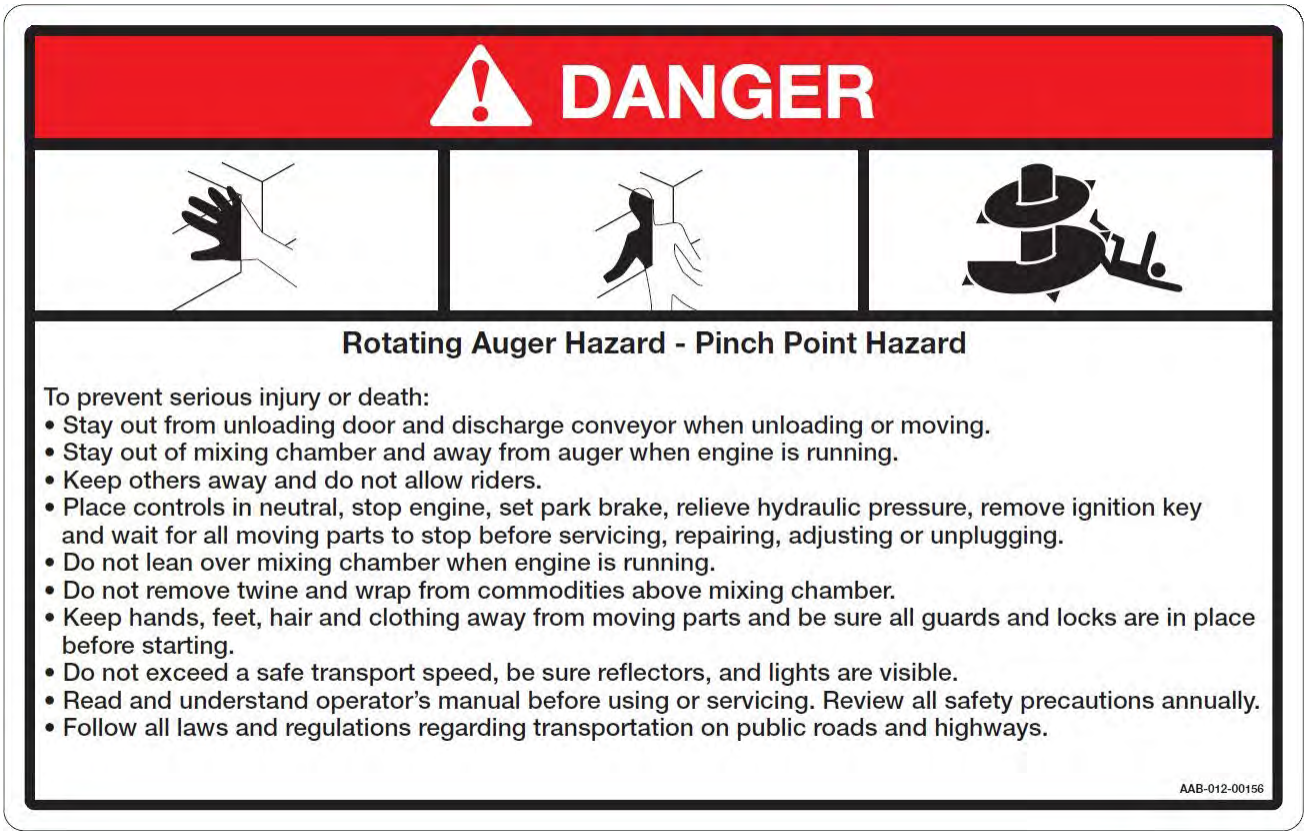

DECAL 'A'

DECAL 'B'

DECAL 'C'

SAFETY SIGN LOCATIONS

CAUTION

To prevent injury or equipment damage:

- Secure conveyor discharge with lock channel and pin before servicing or transporting.

AAB-012-00037

DECAL 'D'

WARNING

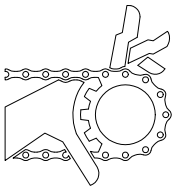

ROTATING PART HAZARD

KEEP AWAY

To prevent serious injury or death from rotating parts:

- Place controls in neutral, stop engine, set park brake, remove ignition key, and wait for all moving parts to stop before servicing, repairing, adjusting, or unplugging.
- Close and secure guards before operating.
- Keep hands, feet, hair, and clothing away from moving parts.

AAB-012-00035

DECAL 'E'

WARNING

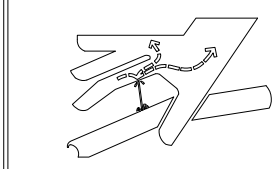

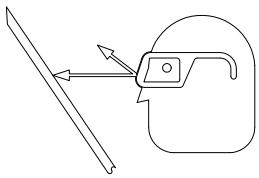

HIGH PRESSURE FLUID HAZARD

To prevent serious injury or death from high pressure fluid:

Relieve pressure on system before repairing or adjusting. Wear proper hand and eye protection when searching for leaks. Use wood or cardboard instead of hands. Keep all components in good repair.

AAB-012-00036

DECAL 'F'

CAUTION

NOT FOR HIGHWAY TRAVEL

DO NOT EXCEED 15 KM/H (10 MPH) MAX. WHEN TRANSPORTING THIS EQUIPMENT.

AAB-012-00038

DECAL 'G'

SAFETY SIGN LOCATIONS

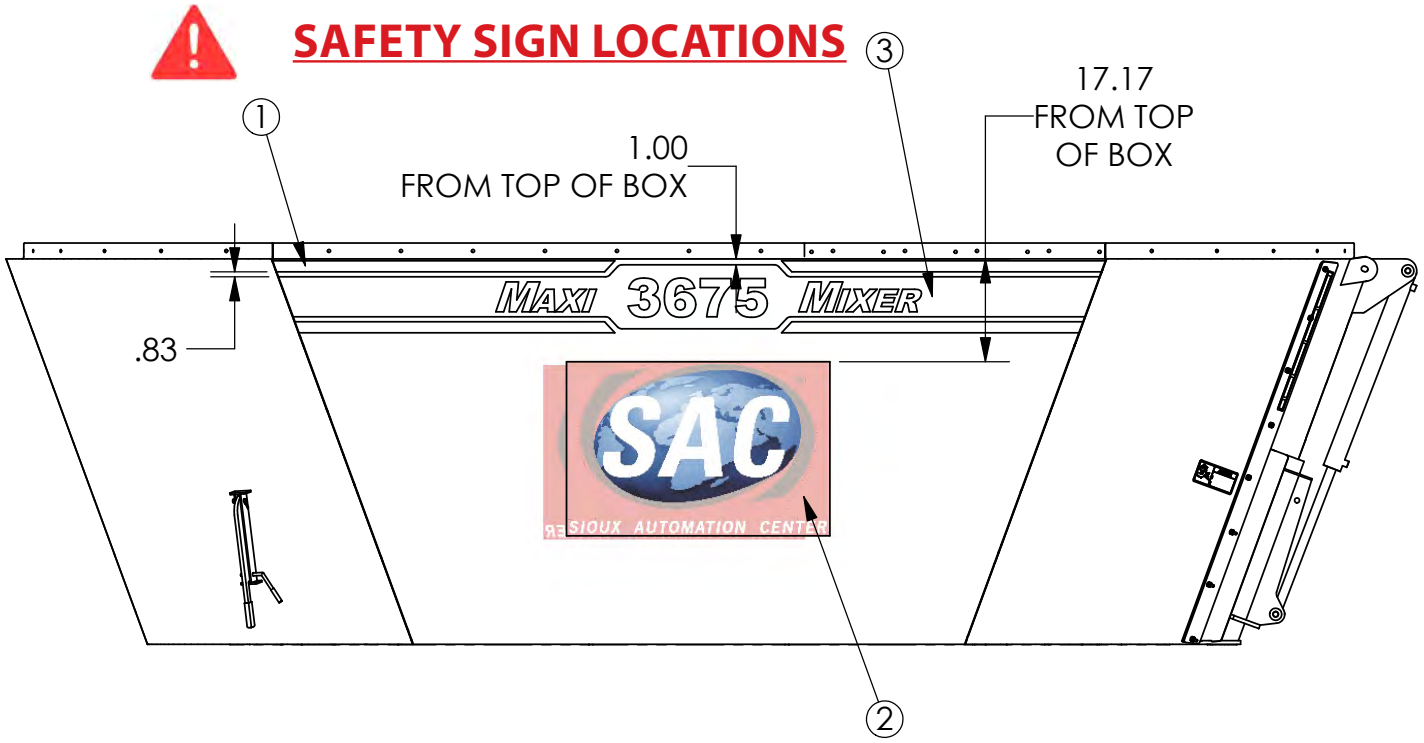

MODEL	PART #	DESCRIPTION
3640	VM900275	3640 DECAL KIT
3645	VM900276	3645 DECAL KIT
3650	VM900277	3650 DECAL KIT
3655	VM900278	3655 DECAL KIT
3670	VM900279	3670 DECAL KIT

MODEL	PART #	DESCRIPTION
3675	VM900280	3675 DECAL KIT
3680/3680HD	VM900281	3680 DECAL KIT
3690	VM900282	3690 DECAL KIT
36100	VM900283	36100 DECAL KIT
36125	VM900284	36125 DECAL KIT

NOTE: DECAL KITS SHOWN IN THE TABLE INCLUDE ALL THREE OF THE ITEMS SHOWN IN THE FIGURE. IF INDIVIDUAL DECALS ARE DESIRED, THE LARGER TABLE PROVIDES THOSE PART NUMBERS.

ITEM #	PART #	VM900275 QTY MODEL 3640	VM900276 QTY MODEL 3645	VM900277 QTY MODEL 3650	VM900278 QTY MODEL 3655	VM900279 QTY MODEL 3670	VM900280 QTY MODEL 3675	VM900281 QTY MODEL 3680 & 3680HD	VM900282 QTY MODEL 3690	VM900283 QTY MODEL 36100	VM900284 QTY MODEL 36125	DESCRIPTION
1	DEC507	2	2	0	0	0	0	0	0	0	0	STRIPE DECAL
	DEC488	0	0	2	2	0	0	0	0	0	0	STRIPE DECAL
	DEC490	0	0	0	0	2	2	2	2	2	2	STRIPE DECAL
2	DEC626	2	2	2	2	0	0	0	0	0	0	SAC LOGO
	DEC625	0	0	0	0	2	2	2	2	2	2	SAC LOGO
3	DEC673	2	0	0	0	0	0	0	0	0	0	3640 DECAL
	DEC674	0	2	0	0	0	0	0	0	0	0	3645 DECAL
	DEC675	0	0	2	0	0	0	0	0	0	0	3650 DECAL
	DEC676	0	0	0	2	0	0	0	0	0	0	3655 DECAL
	DEC677	0	0	0	0	2	0	0	0	0	0	3670 DECAL
	DEC678	0	0	0	0	0	2	0	0	0	0	3675 DECAL
	DEC679	0	0	0	0	0	0	2	0	0	0	3680 DECAL
	DEC680	0	0	0	0	0	0	0	2	0	0	3690 DECAL
	DEC681	0	0	0	0	0	0	0	0	2	0	36100 DECAL
	DEC682	0	0	0	0	0	0	0	0	0	2	36125 DECAL

HYDRAULIC SAFETY

- Make sure that all components in the hydraulic system are kept in good condition and are clean.
- Replace any worn, cut, abraded, flattened, or crimped hoses or metal lines immediately.
- Relieve pressure before working on hydraulic systems.
- Do not attempt any makeshift repairs to the hydraulic fittings or hoses by using tape, clamps, or cements. The hydraulic system operates under extremely high pressure. Such repairs will fail suddenly and create a hazardous and unsafe condition.
- Wear proper hand and eye protection when searching for a high-pressure hydraulic leak. Use a piece of wood or cardboard as a backstop instead of hands to isolate and identify a leak.
- If injured by a concentrated high-pressure stream of hydraulic fluid, seek medical attention immediately. Serious infection or toxic reaction can develop from hydraulic fluid piercing the skin surface.
- Before applying pressure to the system, make sure all components are tight and that lines, hoses, and couplings are not damaged.

MAINTENANCE SAFETY

- Follow ALL the operating, maintenance, and safety information in the manual.
- Support the machine with blocks or safety stands when changing tires or working beneath.
- Follow good shop practices:

- Keep service areas clean and dry.
- Be sure electrical outlets and tools are properly grounded.
- Use adequate lighting for the job at hand.

- Use only tools, jacks, and hoists of sufficient capacity for the job.
- Place controls in neutral, stop engine, set park brake, remove ignition key, and wait for all moving parts to stop before servicing, adjusting, repairing, or unplugging.
- Relieve pressure from the hydraulic circuit before servicing or disconnecting from the tractor.
- Make sure all guards are in place and properly secured when maintenance work is completed.
- Before applying pressure to a hydraulic system, make sure all lines, fittings, and couplers are tight and in good condition.
- Keep hands, feet, hair, and clothing away from all moving and/or rotating parts.
- Maintain fasteners in running gear systems at their specified torque at all times.
- Clear the area of bystanders, especially small children, when carrying out any maintenance and repairs or making any adjustments.

TIRE SAFETY

- Failure to follow proper procedures when mounting a tire on a rim can produce an explosion which may result in a serious injury or death.
- Do not attempt to mount a tire unless you have proper equipment and experience to do job.
- Inflating or servicing tires can be dangerous. Whenever possible, trained personnel should be called to service and/or mount tires.
- Always order and install tires and wheels of appropriate type and load capacity to meet or exceed anticipated weight to be placed on the equipment.

BEFORE OPERATION:

- Carefully study and understand this manual.
- Do not wear loose-fitting clothing which may catch in moving parts.
- Always wear protective clothing and substantial shoes.
- It is recommended that suitable hearing and eye protection be worn.
- Operator may come in contact with certain materials which may require specific safety equipment relative to handling of such materials.
- Keep wheel lug nuts tightened to specified torque.
- Assure that agricultural implement tires are inflated evenly.
- Give unit a visual inspection for any loose bolts, worn parts, or cracked welds, and make necessary repairs. Follow maintenance safety instructions included in this manual.
- Be sure there are no tools lying on or in equipment
- Attach securely to the tractor using a retainer on the drawbar pin and a safety chain.
- Do not use unit until you are sure that area is clear, especially around children and animals.
- Don't hurry learning process or take unit for granted. Ease into it and become familiar with your new equipment.
- Practice operation of your equipment and its attachments. Completely familiarize yourself and other operators with its operation before using.
- Make sure that brakes are evenly adjusted (if equipped with brakes).
- Use a tractor equipped with Roll Over Protection System (ROPS) and fasten your seat belt prior to starting the engine.
- Manufacturer does not recommend usage of a tractor with the ROPS removed.
- Move tractor wheels to widest recommended settings to increase stability.
- Do not allow anyone to stand between tongue or hitch and towing vehicle when backing up to equipment.
- Stay away from unloading door and conveyor discharge when unloading or moving.

DURING OPERATION

- Beware of bystanders, PARTICULARLY CHILDREN! Always look around to make sure that it is safe to start engine of towing vehicle or move unit. This is particularly important with higher noise levels and quiet cabs, as you may not hear people shouting.
- NO PASSENGERS ALLOWED- Do not carry passengers anywhere on or in tractor or equipment.
- Keep hands and clothing clear of moving parts.
- Do not clean, lubricate, or adjust your equipment while it is moving.
- When halting operation, even periodically, set tractor or towing vehicle's brakes, disengage PTO, shut off engine, and remove ignition key.
- Be especially observant of operating area and terrain. Watch for holes, rocks, or other hidden hazards. Always inspect area prior to operation.

  - DO NOT operate near edge of drop-off or banks.

  - DO NOT operate on steep slopes as overturn may result.

  - Operate up and down (not across) intermediate slopes. Avoid sudden starts and stops.

- Pick the most level possible route when transporting across fields. Avoid edges of ditches, gullies, and steep hillsides.
- Be extra careful when working on inclines.
- Maneuver tractor or towing vehicle at safe speeds.
- Avoid overhead wires or other obstacles. Contact with overhead lines could cause serious injury or death.
- Avoid loose gravel, rocks, and holes; they can be dangerous for equipment operation or movement.
- Allow for unit length when making turns.
- Do not walk or work under raised components or attachments unless securely positioned and blocked.
- Keep all bystanders, pets, and livestock clear of work area.
- Operate towing vehicle from operators seat only.
- Never stand alongside of unit with engine running or attempt to start engine and/or operate machine while standing alongside of unit.
- Never leave running equipment unattended.
- As a precaution, always recheck hardware on equipment following every 100 hours of operation. Correct all problems. Follow maintenance safety procedures.
- Never hand feed materials into mixer while it is running. Rotating augers inside mixer may not be visible from the loading point, and may cut or grab hands, clothing, or material being loaded, causing severe injury. Always stop tractor engine before hand loading materials.
- No not allow operation of this unit by inexperienced or unqualified people. Keep all unqualified people away from mixer during operation. Operators of this unit must be alert and use good judgement at all times. Operator should not climb on ladder or any part of the mixer when loading, mixing, or discharging material.
- Be sure the inside of the mixer is clear of any obstruction before operating.
- Use caution when working around the discharge area. Stay clear of power chute & slide tray. These are controlled from the tractor and could operate without warning, creating pinch points which could cause severe injury or death. Always stop tractor engine and remove PTO drive line & hydraulic hoses before working close to discharge area.
- Never attempt to release jammed materials or clean materials from any area of the mixer or discharge chute with out stopping engine and removing drive line first. Moving parts can be hidden by materials, and stopped parts can start unexpectedly, causing severe injury. Always stop tractor engine and remove PTO drive line before attempted to remove jammed material or to clean.

DURING OPERATION

- Never put arms or feet inside unit, power chute, or discharge door opening, nor climb on or in the mixer while it is running. NEVER allow anyone to position themselves over or near the top of the mixer while it is running. Rotating augers, and sprockets can grab clothing or create pinch points which can cause severe injury or death to the operator or bystanders. Always stop tractor engine and remove the PTO drive line so that the mixer can not be accidentally turned on while inspecting, servicing, repairing, or cleaning the mixer.

FOLLOWING OPERATION

- Following operation, or when unhitching, stop tractor or towing vehicle, set brakes, shut off engine and remove ignition key.
- Store unit in an area away from human activity.
- Do not park equipment where it will be exposed to livestock for long periods of time. Damage and livestock injury could result.
- Do not permit children to play on or around stored unit.
- Make sure all parked machines are on a hard, level surface and engage all safety devices.
- Wheel chocks may be needed to prevent unit from rolling.

HIGHWAY AND TRANSPORT OPERATIONS

- SAFETY CHAINS: If equipment is going to be transported on a public highway, always follow state and local regulations regarding safety chains and auxiliary lighting. Be sure to check with local law enforcement agencies for your own particular regulations. If required safety chains should be obtained and installed. Only safety chains (not elastic or nylon/plastic tow straps) should be used to retain connection between towing and towed machines in event of separation of primary attaching system. Use a high strength, appropriately sized hitch pin with a mechanical retainer and attach safety chains. Criss-cross chains under tongue and secure to draw bar cage, mounting loops, or bumper frame.
- Adopt safe driving practices:

  - Keep brake pedals latched together at all times. NEVER USE INDEPENDENT BRAKING WITH MACHINE IN TOW, LOSS OF CONTROL AND/OR UPSET OF UNIT CAN RESULT. • Use only a tractor with adequate brakes to stop the tractor coupled with the machine and payload.

  - Always drive at a safe speed relative to local conditions, ensure that your speed is low enough for an emergency stop. Keep speed to a minimum.

  - Reduce speed prior to turns to avoid risk of overturning.

  - Always keep tractor or towing vehicle in gear to provide engine braking when going downhill. Do not coast.

  - Do not drink and drive!
- Comply with state and local laws governing highway safety and movement of farm machinery on public roads.
- Use approved accessory lighting, flags and necessary warning devices to protect operators of other vehicles on highway during transport. Various safety lights and devices are available from your dealer.
- Use of flashing amber lights is acceptable in most localities. However, some localities prohibit their use. Local laws should be checked for all highway lighting and marking requirements.

- When driving tractor and equipment on road under 10 m.p.h. (15 kph) at night or during day, use flashing amber warning lights and a slow moving vehicle (SMV) identification emblem.

- Plan your route to avoid heavy traffic.

HIGHWAY AND TRANSPORT OPERATIONS

- Be a safe and courteous driver. Always yield to oncoming traffic in all situations, including narrow bridges, intersections, etc.
- Be observant of bridge load ratings. Do not cross bridges rated lower than gross weight at which you are operating.
- Make sure the SMV (Slow Moving Vehicle) emblem and all the lights and reflectors that are required by the local highway and transport authorities are in place, are clean and can be seen clearly by all overtaking and oncoming traffic.
-
- Watch for obstructions overhead and side to side while transporting.
- Always operate equipment in a position to provide maximum visibility. Make allowances for increased length and weight of equipment when making turns, stopping unit, etc.

FOLLOWING AN EFFECTIVE MAINTENANCE SCHEDULE

It is the Owner/Operator's responsibility to operate, lubricate, maintain, and store the machine in accordance with all instructions and safety procedures. While machine operating conditions will vary, an effective maintenance schedule can be followed when considering the following points.
Remember, the guidelines established in this manual are general. All maintenance and service work is not limited to these guidelines. If you have any questions or concerns, please contact your Sioux Automation Dealer or Distributor. Points to Consider in Developing an Effective Maintenance Schedule:

- Will the machine be operating at full capacity (i.e. mixing chamber full, high-density ration)? For example, a heavy load would yield a ration density equal to or greater than 30 lbs/ft^3.
- How long will the machine be operated each day? Depending on the operation, some customers require as little as 2 hours a day, while others require in excess of 16 hours a day.
- Will the machine be transported long distances? If the answer is yes, this would require more attention to components such as wheels and hubs.
- Will the machine be transported over rough terrain? Will the same terrain have conditions such as mud, sand, water, etc.?
- Will the machine be exposed to extreme temperatures (ambient air temperature)? This can be interpreted as hot or cold, or sudden changes from hot to cold or vice versa. This may affect components such as the machine lubricants, among others.
- Will there be dirty and dusty conditions present? While the machine is designed for these parameters, special attention to items such as breathers is required.
- Will there be any foreign matter entering the mixing chamber? Depending on the operation, it may be difficult to eliminate foreign matter such as rocks, stones, steel, wood, etc. However, these items can place added wear on components such as the mixing chamber walls, auger assembly, and auger knives.

PERFORMING MAINTENANCE

- Make sure there is plenty of ventilation. Never operate engine of towing vehicle in a closed building. Exhaust fumes may cause asphyxiation.
- Before working on this machine, stop towing vehicle, set brakes, shut off engine and remove ignition key.
- Always use safety support and block wheels. Never use a jack to support machine.
- Always use proper tools or equipment for job at hand.
- Use extreme caution when making adjustments.
- Never use your hands to locate a hydraulic leak on attachments. Use a small piece of cardboard or wood. Hydraulic fluid escaping under pressure can penetrate skin.
- Openings in skin and minor cuts are susceptible to infection from hydraulic fluid. Without immediate medical treatment, serious infection and reactions can occur.
- When disconnecting hydraulic lines, shut off hydraulic supply and relieve all hydraulic pressure.
- Replace all shields and guards after servicing and before moving.
- After servicing, be sure all tools, parts and service equipment are removed.
- Do not allow grease or oil to build up on any steps or platform.
- When replacing bolts, refer to owners manual.
- Refer to bolt torque chart for head identification marking.
- Where replacement parts are necessary for periodic maintenance and servicing, genuine factory replacement parts must be used to restore your equipment to original specifications. Manufacturer will not claim responsibility for use of unapproved parts or accessories and other damages as a result of their use.
- If equipment has been altered in any way from original design, manufacturer does not accept any liability for injury or warranty.
- A fire extinguisher and first aid kit should be kept readily accessible while performing maintenance on this equipment.
- Check the tightness of the wheel lug nuts on a weekly basis.

BOLT TORQUE

TORQUE DATA FOR STANDARD NUTS, BOLTS, AND CAPSCREWS.

Tighten all bolts to torques specified in chart unless otherwise noted. Check tightness of bolts periodically, using bolt chart as guide. Replace hardware with same grade bolt.

NOTE: Unless otherwise specified, high-strength Grade 5 hex bolts are used throughout assembly of equipment.

Torque Specifications

Bolt Torque for Standard bolts *

	GRADE 2		GRADE 5		GRADE 8	
"A"	lb-ft	(N.m)	lb-ft	(N.m)	lb-ft	(N.m)
1/4"	6	(8)	9	(12)	12	(16)
5/16"	10	(13)	18	(25)	25	(35)
3/8"	20	(27)	30	(40)	45	(60)
7/16"	30	(40)	50	(70)	80	(110)
1/2"	45	(60)	75	(100)	115	(155)
9/16"	70	(95)	115	(155)	165	(220)
5/8"	95	(130)	150	(200)	225	(300)
3/4"	165	(225)	290	(390)	400	(540)
7/8"	170	(230)	420	(570)	650	(880)
1"	225	(300)	630	(850)	970	(1310)

Bolt Torque for Metric bolts *

	CLASS 8.8		CLASS 9.8		CLASS 10.9	
"A"	lb-ft	(N.m)	lb-ft	(N.m)	lb-ft	(N.m)
6	9	(13)	10	(14)	13	(17)
7	15	(21)	18	(24)	21	(29)
8	23	(31)	25	(34)	31	(42)
10	45	(61)	50	(68)	61	(83)
12	78	(106)	88	(118)	106	(144)
14	125	(169)	140	(189)	170	(230)
16	194	(263)	216	(293)	263	(357)
18	268	(363)	--	--	364	(493)
20	378	(513)	--	--	515	(689)
22	516	(699)	--	--	702	(952)
24	654	(886)	--	--	890	(1206)

Torque figures indicated are valid for non-greased or non-oiled threads and heads unless otherwise specfied. Therefore, do not grease or oil bolts or capscrews unless otherwise specified in this manual. When using locking elements, increase torque values by 5%.

* GRADE or CLASS value for bolts and capscrews are identified by their head markings.

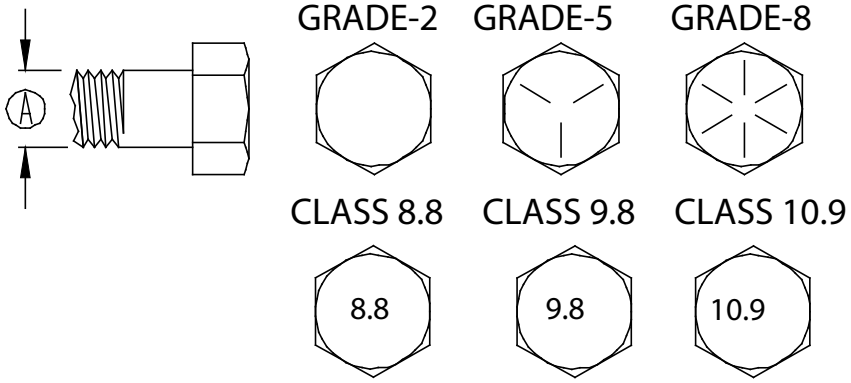

PTO HORSEPOWER REQUIREMENTS

- PTO horsepower requirements are based on most normal dairy or beef rations. Horsepower requirements may vary depending on the ration or material to be mixed.
- Refer to tractor weight requirements for these recommendations and transporting safety precautions for additional tractor and towing requirements.

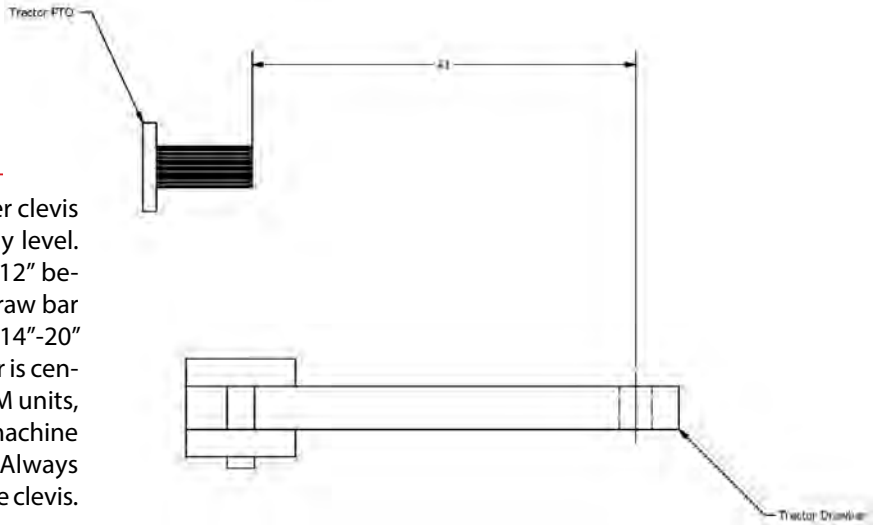

DRAW BAR ATTACHING

- Adjust tractor draw bar and/or the mixer clevis hitch so that the mixer is approximately level. The top of the draw bar should be 8"-12" below the tractor PTO shaft. Adjust the draw bar horizontally so that the hitch pin hole is 14"-20" behind the tractor PTO and the draw bar is centered and locked into place. On 540 RPM units, the shaft must be a 1-3/8" 6-spline. The machine is designed with a clevis type hitch. Always attach with the tractor drawbar inside the clevis.

PTO	SPLINE	DRAWBAR POSITION (A1) (Standard double yoke PTO)	DRAWBAR POSITION (A1) (Consant Velocity (CV) PTO)
TYPE 1	540rpm- 1 3/8" (35mm)	14.0" (356mm)	9.75" (250mm)
TYPE 2	1000rpm 1 3/8" (35mm)	16.0" (400mm)	9.75" (250mm)
TYPE 3	1000rpm- 1 3/4" (45mm)	20.0" (500mm)	9.75" (250mm)

HYDRAULIC SYSTEM

- For front door discharge units, the tractor must be equipped with a minimum of 2 remote hydraulic outlets with 5 GPM (19 L/min) at 2000 psi (13,750 kPa). On units with the conveyor option, the conveyor lift hoses may be difficult to connect due to the chute weight on the lift cylinder. Lift weight off chute cylinder to connect hoses. Other discharge configurations may require a third remote hydraulic outlet or the use of a diverter valve.

PRE-OPERATION CHECKLIST

Efficient and safe operation of your Sioux Automation 3600 series mixer requires that each operator reads and understands all the operating procedures and all related safety precautions outlined in this section. A pre-operation checklist is provided for the operator. It is important for both the personal safety and maintaining the good mechanical condition of the machine that this checklist is followed.

Before operating the machine the following areas should be checked off:

1. Lubricate the machine as per Maintenance Schedule.
2. Use only a tractor of adequate power and capacity to operate the machine.
3. Ensure that the machine is properly attached to the tractor. Be sure that the retainer is installed in the drawbar pin and the safety chain is attached.
4. Check the hydraulic system. Be sure that the hydraulic reservoir in the tractor is filled to the required specifications.
5. Check the oil level and condition in the planetary gearbox. Be sure they are within the proper levels. Be sure there are no leaks on the gearbox. Stop leaks before continuing.
6. Inspect all hydraulic lines, hoses, fittings, and couplers for tightness. Use a clean cloth to wipe any accumulated dirt from the couplers before connecting to the hydraulic system of the tractor.
7. Check the tires to be sure that they are inflated to the specified pressure. Torque wheel nuts to 180 ft-lbs (244 N-m).
8. Check that the auger rotates freely. Remove all string, twine, or other entangled material.
9. Check that the PTO driveline is locked to the tractor shaft and the guard is chained to the frame.
10. Close and secure all guards and safety devices.

MIXER SETUP

To avoid personal injury: The mixer floor may be slippery and the auger can spin unexpectedly when stepped on. Use caution when stepping or standing inside the unit, place a protective cover over the auger knives when work inside the box is required.

MIXER RUN-IN

A. Before Starting:
- Check oil level and condition of the planetary gearbox.
- Cycle the unloading door and conveyor several times to fully charge the hydraulic system with oil.
- Disconnect PTO driveline and turn auger by hand. Be sure that it turns freely.
- Check for debris and/or any other items that could block or affect machine operation.
- Top up tractor oil reservoir if required.

B. Test run the mixer.
- Make sure mixer is empty, then start the mixer.
- Run for at least five minutes at rated PTO RPM.
- Raise and lower the door and operate the conveyor/slide tray several times.
- Disengage the mixer and turn off the tractor engine and remove drive line.
- Check the mixer drive components to be sure they are not abnormally hot.

C. After operating for ½ hour:
- Check that all bolts and fasteners are all tightened properly. (See Torque Spec.)
- Check that all wheel nuts are tight and torque to 180 ft-lbs (244 N-m).
- Check the auger. Remove all string, twine, or other entangled material.
- Check that no hoses are pinched, rubbing, or being crimped. Re-align as required.
- Check for oil leaks. Stop leaks before continuing.
- Lubricate all grease fittings.

D. After operating for 5 hours and 10 hours:
- Retorque all wheel nuts, fasteners, and hardware.
- Check that auger turns freely.
- Check the auger. Remove all string, twine, or other entangled material.
- Proceed with normal servicing and maintenance schedule as defined in the Maintenance Section.

E. After operating 50-100 hours:
- Change gearbox oil(s) to remove any initial contaminants per maintenance instructions.

If any of these items are not running as indicated, immediately repair or contact your service representative.

LIFT CONVEYOR ADJUSTMENT

- To adjust the height of the lift conveyor, install cylinder stops as required. Make sure that the same number and size of stops are used on both cylinders. For best performance, the unloading height should be set at the lowest height possible. The discharge tip-off on the conveyor should be adjusted for correct magnet and discharge angle. Remove or loosen the upper bolts, pivot the tip off to the desired angles and reinstall or retighten all bolts.

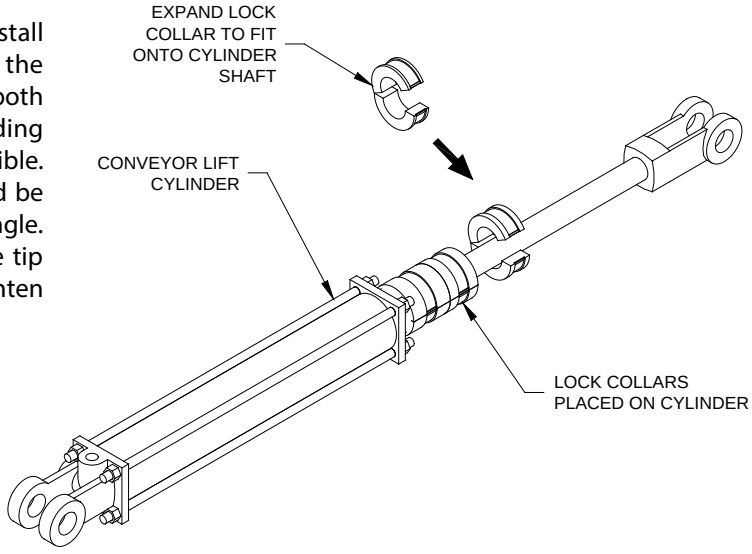

MIXER OPERATION

Always refer to Equipment Safety Guidelines & Before Operation sections of this manual before operating this mixer.

GENERAL

- Your 3600 series mixer was designed for blending dairy and beef rations. Most commonly used ingredients, including limited amounts of dry stem hay, can be mixed quickly and uniformly in this mixer. If you have questions regarding your feed ration or have other applications, please contact Sioux Automation Center, Inc.

- Mixing performance can vary greatly according to the differences in materials, loading sequence, mixing speed, and unloading methods.

SAFETY

- When the mixer is in operation it has many moving parts which could cause severe injury or death to persons coming in contact with these parts. To help avoid serious accidents, please read and understand this manual.

LIMITATIONS

- Keep in mind the overall size of the mixer to allow clearance through doorways.

- Do not force hay, into auger(s) with loading device. The area over the auger(s) do not have bucket guards, avoid bucket contact with the auger(s) to prevent potential damage to knives and auger(s).

MIXING SPEED

- When deciding when and how fast to operate the mixer, factors such as ingredients being used, the thoroughness of the mix, and the time available to mix must be considered. Normal mixing speed is 3/4 to full PTO speed.

- Do not exceed rated PTO speed. When the mixer is operated faster than rated PTO speed the strain on the drive train and mixer is greatly increased.

HAY RESTRICTOR SETTINGS

Do not adjust the hay restrictors while the mixer is running. Moving feed inside the mixer can make the hay restrictor move suddenly causing injury to person making the adjustment.

The mixer is equipped with two adjustable hay restrictors, one is located at the left front and the other at the right rear of the mixer. The purpose of the hay restrictor is to provide better control of the processing and mixing of long stem forages into the ration. The hay restrictors on the Maxi-mixer can be set in five different positions, zero "neutral", one, two, three, and four (high). The operator will need to experiment with the different setting on each hay restrictor in order to achieve the hay cut length and mix desired. The starting position should be "one" for each hay restrictor, and adjust each hay restrictor one hole at a time. It is not required for both hay restrictors be set at the same position.

The further each hay restrictor is engaged the more aggressive the knives will cut, and the shorter the stem lengths will be. Be aware that the more the hay restrictors are engaged the more horsepower will be required to process & mix the load. This will also increase wear on all contact surfaces.

Having the hay restrictors set to zero (neutral) can be used if the ration does not include significant amounts of long stem hay, or if the mixer has adequate "boiling" or product movement. The hay restrictors set to zero can help reduce hay spillage and allowing the feed to travel freely through the box.

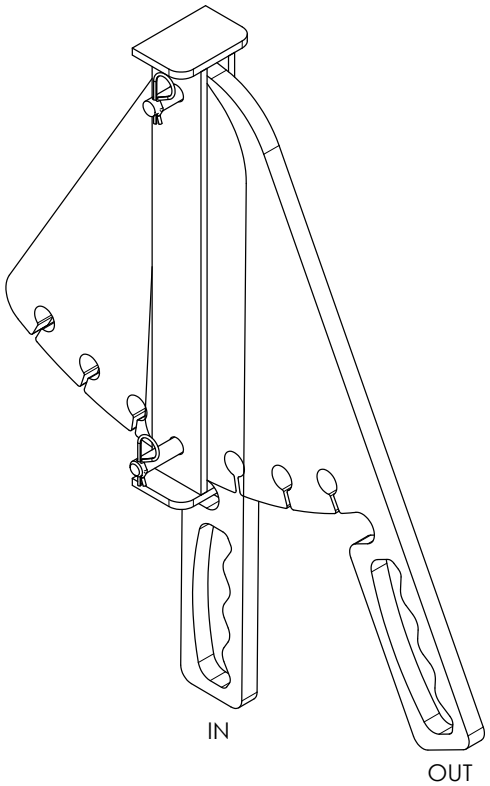

ATTACHING / UNHOOKING

The machine should always be parked on a level, dry area that is free of debris and foreign objects.
Follow this procedure when attaching:

1. Clear the area of bystanders and remove foreign objects from the machine and working area.
2. Make sure there is enough room to back the tractor up to the hitch point.
3. Start the tractor and slowly back it up to the hitch point.
4. Stop the tractor engine, place all controls in neutral, set park brake, and remove ignition key before dismounting.
5. Adjust the length of the drawbar to give the appropriate dimension between the PTO shaft and drawbar pin hole. (Refer to Tractor Operator's Manual).
6. Use the clevis on the hitch to level the machine.
7. Use the jack to raise or lower the hitch pole to align with the drawbar.
8. Install the drawbar pin with provisions for a mechanical retainer such as a 'Klik' pin. Install the retainer.
9. Attach safety chain between the machine and the tractor drawbar cage.
10. Connect the PTO shaft:
    - Check that the PTO driveline telescopes easily and the shield rotates freely.
    - Attach the driveline to the tractor by retracting the locking pin, slide the yoke over the shaft and push on the yoke until the lock pin clicks into position. Pull on the yoke to be sure the driveline is locked on the shaft.
11. Connect the hydraulics:
    - Use a clean cloth or paper towel to clean the couplers on the ends of the hoses. Also clean the area around the couplers on the tractor.
    - Insert the male ends of the couplers into the remote hydraulic ports on the tractor.
    - Be sure that each hydraulic circuit on the machine matches up with the correct set of ports on the tractor. Be sure to match the system with the desired control lever in the tractor.
12. Connect the wiring harness and scale indicator power cord.
13. Route the hoses and wiring harness along the hitch and secure in position to prevent entanglement with any moving parts.
14. Raise the implement jack, remove and mount on the upper storage bracket.
15. When unhooking from the tractor, reverse the above procedure.

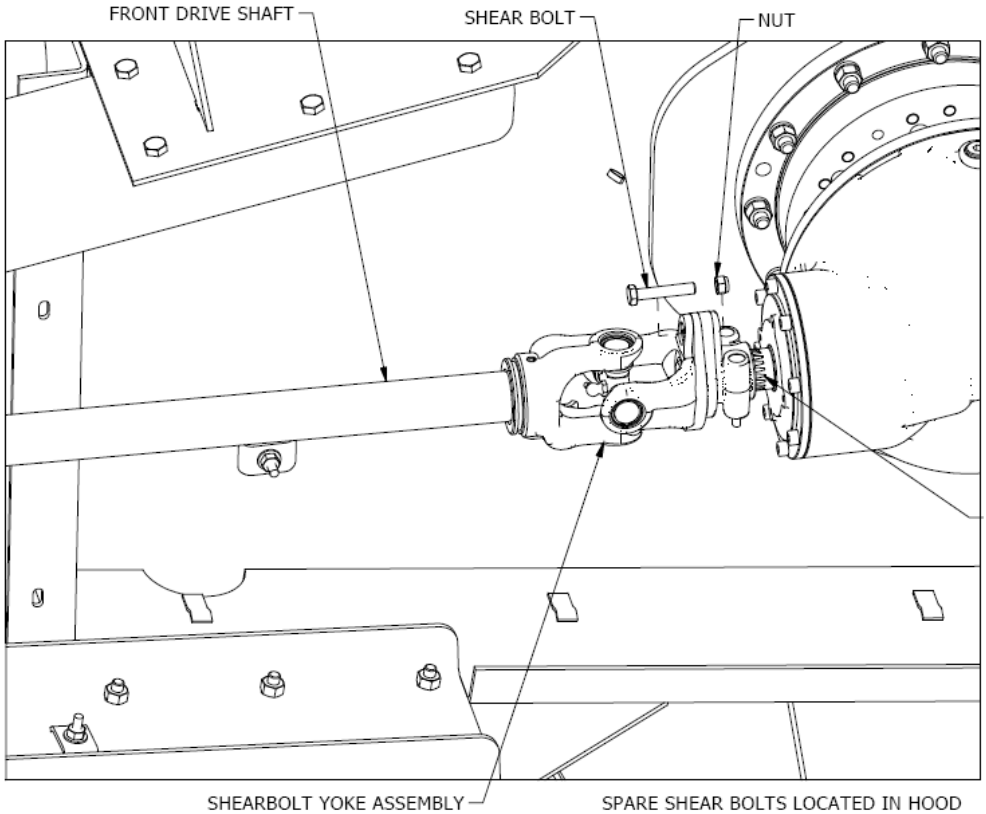

NOTE:
ALL DRIVELINE GAURDING REMOVED FOR CLARITY

SHEAR BOLT PROTECTION

Should excessive loads be placed on the driveline, the shear bolt will rupture. This is a safety feature; however, do not depend on this as the maximum load indicator. The shear bolt is located on the machine end of the PTO shaft supplied with the machine.
The standard shear bolt size for all standard mixers equipped with a mechanical driveline is **M10X60mm, GRD 8.8**. The standard shear bolt size for all HD mixers equipped with a mechanical driveline is a **3/8x2 GRD 8** bolt.

If the shear bolt breaks, it **MUST** be replaced
with the correct bolt specified by the manufacturer.

MIXING PROCEDURE

- There are some basic concepts that must be understood to achieve top mixing performance with the mixer.
- A new machine will need an initial run-in period to polish the auger and mixer sides to achieve correct material movement inside the mixer. Until the unit is polished inside, one may experience spillage, dead spots, or increased horsepower requirements. The load size may need to be reduced until the unit is polished inside.
- Mixing a ration in a vertical mixer generally involves three steps; processing, mixing, and unloading. The operation of the mixer will vary greatly with the various feeds and climatic conditions. In most instances, "trial and error" is the best method of setting the machine up for a particular commodity to obtain maximum performance. To prevent over-cutting of feed, we suggest starting with the restrictor blades in the out position, and then adjusting to obtain the desired coarseness of the mix. The bulkiest and lightest commodities should be added first. Once these commodities are partially cut and broken apart, others can be added. Additional cutting will take place during mixing, so be careful not to over cut. The type of mix required varies from one operation to the other, and therefore, mixing times and procedures will vary as well.
- It is recommended that commodities are added to the mixing chamber while the augers are turning for maximum mix efficiency. Starting the augers from a standstill with a full load in the mixing chamber places additional stress on the machine. Even though it is designed to handle this stress, repetitive startups under load may affect the service life of the machine. If however, due to circumstances, it is required to restart the machine while loaded, retract the restrictor blades all the way in order to decrease starting torque as much as possible.
- The sequence and timing of these steps is very important, and is different for every operator because of variations in materials and conditions. There is some experimentation that must be done to work out the best equipment, sequence, and timing for your particular operation. The following steps are some general suggestions to achieve good results.

Follow these procedures when using the machine:

1. Attach the machine to the tractor, as described in the 'Attaching/Unhooking' section.

2. Review the Pre-Operation checklist, as described in the 'Pre-Operation Checklist' section.

3. Review the location and function of all controls, as described in the 'Controls' section.

4. Transport the machine to the feed storage area.

5. Starting:
   a. Start the tractor engine and run at low speed.
   b. Engage the PTO clutch to start auger.
      Important: Rapid engagement under a heavy load can break the shear bolt. Engage slowly for the best results.
   c. Increase engine speed until the desired RPM is reached.
   d. Proceed with loading of the ration.

6. Stopping:
   a. Stop forward motion.
   b. Close unloading door.
   c. Stop conveyor when commodity is off.
   d. Slow engine to low idle.
   e. Disengage PTO clutch.
   f. Stop engine if required.

7. Emergency Stopping:

If an emergency should arise, disengage PTO, turn hydraulics off, stop forward motion and stop engine immediately.

8. Loading Feed Rations:
   a. Position the mixer where the loading machine has clear and easy access.
   b. Start the machine (Refer to #5). Run at rated PTO speed.
   c. Begin adding ingredients to the mixing chamber in order to cut and mix a uniform feed ration.

MIXER OPERATION

Warning: While loading the machine, be certain that no bucket or loading device comes into contact with the rotating auger inside the mixing chamber. This may cause serious damage to the mixer and/or loader, and may cause injury or death to the operator.

Warning: Never load an unhitched machine. The machine is designed to be loaded only when properly hitched to a suitable tractor. Improper loading can cause loss of control, severe injury, or death.

Warning: A loaded machine (machine and payload) may weigh as much as 21,000 lbs (9,500 kg). An operator must use his own discretion when negotiating rough and uneven terrain. Improper operation of the loaded machine can cause loss of control, severe injury, or death.

Danger: Never enter the mixing chamber or go on the conveyor unless all controls are in neutral, engine stopped, park brake set, ignition key removed and all moving parts have stopped. Failure to follow these safety precautions can result in serious injury or death.

Important: Always remove twine, string, and wrapping material from bales and/or other commodities from the ground that will be loaded into the mixing chamber. Failure to follow these requirements can cause damage to the machine.

STEP #1 PROCESSING

Materials

Some feed materials will first need to be processed alone in the mixer before they can be efficiently mixed with other feed stuffs. These materials include;

- Large square or round bales of alfalfa*
- Large square or round bales of high moisture "Baleage"*
- Large square or round bales of long mixed grasses, wheat or oat hay and crop residues bales*
- Very light and bulky feedstuffs*

* Always remove twine from bales before loading into the mixer.

Mixer Setup

- Be sure that mixer is sitting level front to back and side to side. This will ensure a level and even mix of feed.
- Be sure the tractor is sitting straight in line with the mixer. This will prevent premature wear to the drive line and gearboxes.
- Completely close mixer door.
- Set hay restrictors according to instructions in the Mixer Operation section.

Loading

- With the tractor running at approximately PTO speed, load baled hay into the center of the mixer.
- Allow the mixer enough time to process the bale before adding other ingredients (4 to 10 minutes). If inspection of the processing/mixing progress is required, always shut off mixer and tractor before climbing the ladder to inspect the load.
- Processing of long stem forages will continue as other materials are added and mixed. Be careful not to over process these materials before adding other ingredients.

Adjustments

When processing materials, there may be spillage over the side of the mixer. The following steps are to help reduce spillage:

- Reduce load size.
- Reduce tractor/mixer RPM.
- Be sure mixer is level.
- Be sure augers and hipper are polished so the feed moves easier inside mixer.
- Adjust "Hay Restrictors" to a less aggressive or "out" position.
- If spillage still occurs, the optional side extensions may need to be installed.

STEP #2 MIXING

Materials

Your 3600 series Mai-mixer is designed to mix a wide variety of feedstuffs efficiently and quickly. After the long stem forages are coarsely cut in the processing step, other materials such as silage, grains, haylage, and commodities can be added and mixed.

Loading Sequence

With mixer running at approximately 3/4 of rated PTO RPM, and the long stem material processed to a desirable length, the loading of remaining ingredients can begin. The sequence of loading materials will depend on the loading methods and their location relative to the mixer, but a typical loading sequence would be;

- Load haylage and corn silage.
- Load minerals, proteins, and other small quantity ingredients.
  Note: In some cases it may be preferable to load these between the silage's if possible.
- Load grains, wet and dry commodities, etc.
- Load all liquid fats, water, and other liquids. Always load liquids at the center of the mixing chamber.

Note: Never load long stem bales last. They will not be processed or mixed into the rations and may cause unloading difficulties or spillage. Processing of long stem forages will continue as other materials are added and mixed. Be careful not to over process these materials before adding other ingredients. Load all ingredients as quickly as possible, and allow a final mix time of 3 to 5 minutes, or whenever the load looks consistently mixed.

Adjustments

A few loads will need to be mixed to establish the best loading sequence, PTO RPM, mix time, and hay restrictor position for your particular situation. Adjustments may need to made if you see the following;

- Spillage - Refer to the adjustments listed in the processing steps section.
- High Horsepower
  - Reduce the load size.
  - Be sure hopper and augers are "polished" to insure correct feed movement inside mixer.
  - Back off "Hay Stops" to a less aggressive or neutral position see Hay Restrictor Adjustment section.
  - Modify the knife setting, quantity, type or placement, see Inspection and Adjustment section.
- Forage is cut too short
  - Reduce the initial processing time
  - Reduce the aggressiveness of the hay stops, see Hay Restrictor Adjustment section.
  - Reduce the total loading time
  - Reduce the mixer RPM to limit aggressiveness in processing.
  - Modify the knife quantity, type or placement. See Knife Adjustment section.

STEP #3 UNLOADING

Try to unload the mixed ration within a short time after mixing. A fully loaded mixer which is bounced over rough terrain or allowed to settle will require more horsepower during start-up.

- Position the mixer in a straight line with the tractor, to reduce the stress on the PTO shaft.
- Lower lift conveyor (if equipped) and start the conveyor.
- Start the mixer and partially open the door.
- Adjust the door height for the desired flow of feed, while moving forward along the discharge path.
- After the load begins to discharge, increase the tractor RPM to full PTO speed to insure fast and thorough clean out.

KNIFE ADJUSTMENT

The Maxi-mixer is designed and intended for processing and mixing rations that include long stem forages. In most cases, the knives that come standard on the mixer are placed to work well in most rations. However, some rations may require adding or removing knives to obtain the desired result.

KNIFE ROTATION/REPLACEMENT

When knives become worn and rounded on the leading edge, their efficiency is greatly reduced, resulting in longer processing times and increased horsepower requirements. Refer to the parts list section for part number or contact your dealer for ordering replacement knives.

OPTIONAL EQUIPMENT

DUAL DISCHARGE – 8' (96") or 9'-2" (110") Conveyors

On machines equipped with dual side unloading, the conveyor will unload on either side of the machine. The conveyor is operated by using the controls on the tractor, for left and right discharge. (The conveyor will reverse from its direction of discharge, when the remote is moved to the opposite position)

RIGHT/LEFT DISCHARGE – 6' Flat w/ Height Adjustable 41", 60", or 72" Wing Conveyor

Machines that are equipped with right or left discharge have a section of the conveyor that can be raised and lowered. Depending on the options on your mixer, raising and lowering the conveyor can be done hydraulically or manually.

For models equipped with a manual lift, the conveyor must be stopped in order to raise and lower it. A turnbuckle assembly is used to adjust the wing conveyor height. Simply turn the body on the turnbuckle clockwise or counterclockwise, depending on whether the wing is to be raised or lowered.

For models equipped with hydraulic lift discharge, there are two available options for the conveyor operation. One system employs the Lock Collar System. Machines equipped with this system have cylinder lock collars supplied with the equipment. The collars are each different sizes, and are stacked on the lift cylinder's stroke. The number of lock collars used determines the lowering height of the wing. Once the desired height is set, the conveyor is lowered (cylinder retracts) until it bottoms on the lock collar(s). The hydraulic plumbing is designed such that at this point the hydraulic motor on the conveyor will engage. Once the control lever is reversed, the hydraulic motor will disengage and the conveyor wing will rise (cylinder extends).

DISCHARGE MAGNET ASSEMBLY

Magnet angle on the VM800032 slide tray kit is adjustable based on your feed rate and discharge angle on flip up conveyors.

SIDE EXTENTIONS

8" and 12" extensions are available to minimize spillage of light materials during processing and mixing. The purpose of the side extension option is to help contain long stem material while processing, with the convenience of loading from either side.

STAINLESS STEEL LINERS

Stainless steel liners are installed when mixing course materials to extend mixing chamber life span.

REAR DOOR DISCHARGE CONFIGURATIONS

The rear discharge door is controlled hydraulically from the tractor. On most units, the rear door option is equipped in addition to the front discharge door option. The hydraulics for controlling the operation of the rear door is connected to the controls for the front discharge door. Selecting between the operation of the rear door and the front door is done through a diverter valve.

To open or close the rear discharge door, simply pull the rope attached to the selector valve. This will divert the hydraulic pressure to the rear discharge door. The rear door is then controlled from the tractor. When the door is opened, feed will be discharged from the machine onto the ground.

DISHCARGE DEFLECTOR OPTIONS

Your 3600 series mixer can be fitted with numerous discharge deflector options. Consult your SAC Dealer for the kit that best suits your needs>

VM900151-STANDARD DROP DEFLECTOR KIT
VM900260-FLAT DISCHARGE DEFLECTOR FLAP
VM900320-UNDERSIDE FLAP KIT
VM900195-MANGETIC DROP DEFLECTOR KIT
VM900316-DUAL FLIP CAP FOR FLAT DISHCARGE
VM800032-MAGNETIC FLIP CHUTE

INSPECTION AND ADJUSTMENTS

IMPORTANT! READ BEFORE OPERATING MIXER. IT IS THE RESPONSIBILITY OF THE OWNER TO MARE SURE THE MIXER IS SET UP PROPERLY. THE FOLLOWING RECOMMENDATIONS SHOULD BE HELPFUL

INSPECT AND ADJUST

- Roller Chains for wear, proper alignment and tension. Adjust or replace if necessary. Roller chain connector links which pass over polyethylene tightener blocks must have the legs of the cotter pins trailing to the direction of rotation.
- Safety Decals for readability. If any safety decals are removed, obstructed, or otherwise not understandable, they should be replaced immediately. Keep all decals clean and visible.
- Safety Shielding to be sure all shielding is in place and functions properly. Replace all damaged or missing shielding immediately - see parts pages for more information.
- Bolts and Set Screws after a few hours of use and each month thereafter. Tighten if necessary.
- Auger Knives
  Should be rotated/replaced when the long stem material is no longer sufficiently broke up, and there is a noticeable increase in horsepower requirements. Inspect knife fasteners to be sure they are tight. Replace any damaged or missing hardware.
- Trailer Hitch for proper location, alignment and tightness of attaching bolts. If the upper clevis bar becomes excessively worn the hitch assembly should be unbolted and turned over so the unworn hitch bar is on top, or replace as necessary. Frequently check the clevis attaching bolts for tightness, and that the clevis is secure. Worn or damaged bolts must be replaced.
- Wheel Bolts must be kept properly torqued. Damage to the rim may occur if wheel bolts are not checked frequently.
- Freezing Weather the PTO shield requires extra grease to prevent freezing. Snow can accumulate in mixer if stored outside, always remove drain plugs on hopper ends to allow unit to drain completely and check hopper for snow or ice buildup before operating unit. Thaw and remove any obstruction and replace drain plugs before next use.

IMPORTANT: WHEN WELDING ON THIS UNIT: Do **NOT** allow the current to flow through the bearings, roller chains, or scale weigh bars. Ground directly to the item being welded. **ALWAYS** disconnect weigh bar cords from scale indicator before welding.

ELECTRONIC SCALES

- Scale Indicator: Refer to the electronic scale operators manual for adjustment information. The operator's manual for the Electronic Scales should be kept with this manual. Additional scale manuals may be obtained through Sioux Automation Center, Inc.
- Scale Bars: Should be kept clean, dry and lubricated to ensure dependability.
- Normal Scale Activity: Some warm up scale "drift" may occur after the scale is turned on but should zero balance within 10-15 minutes. Scale may zero shift over night due to temperature changes.

Grease

Use SAE multi-purpose high temperature grease with extreme pressure (EP) characteristics on all areas requiring grease lubrication.

Oil
ISO 220 Non-Synthetic Industrial Gear Oil

The planetary and two speed gear boxes on all models require a **mineral** based gear oil. The following oil should be used in both.

Enduratex EP 220 (Petro-Can)

Pillow Block Bearing

All 3600 Series trailer models without the 2-speed transmission option are equipped with a pillow block bearing which supports the front of the driveshaft assembly. The pillow block bearing will require 1 pump of grease every 16 hours and/or 50 loads.

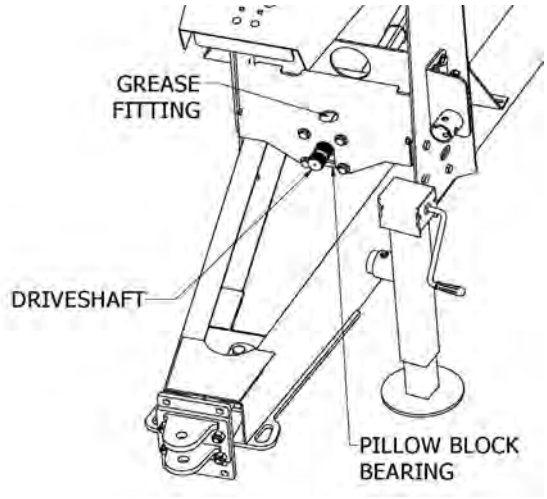

Grease Location for Front End Driveshaft Bearing

PTO SHAFT ASSEMBLY

Depending on the PTO shaft ordered with your 3600 series mixer, the grease locations will be slightly different. Refer to the grease location diagram that follows for standard units.

Important: The service intervals shown are typical. Always follow the instructions supplied with the PTO Shaft for full service information.

P.T.O SHAFT ASSEMBLY
TYPICAL GREASE LOCATIONS
AND SERVICE INTERVALS

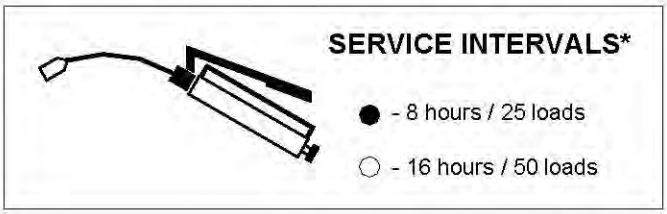

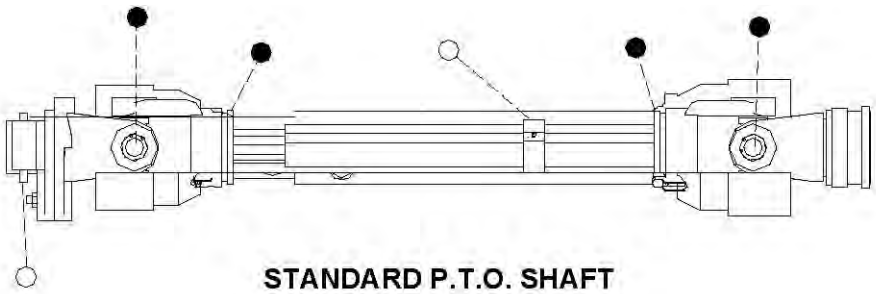

STANDARD P.T.O. SHAFT

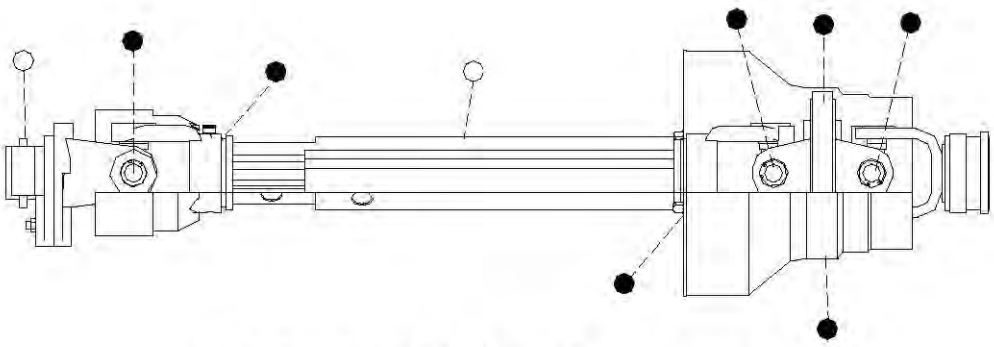

CONSTANT VELOCITY JOINT P.T.O. SHAFT

* - Service intervals typical. Please refer to instructions supplied with P.T.O. shaft for full service information.

WHEEL HUBS

Periodically grease all of the wheel hubs. This will keep water, dirt, and debris out of the hub assembly. Repack hubs every year using a high quality bearing grease. If running continuously through muddy, sandy, or wet conditions, grease the wheel hub assembly more often,

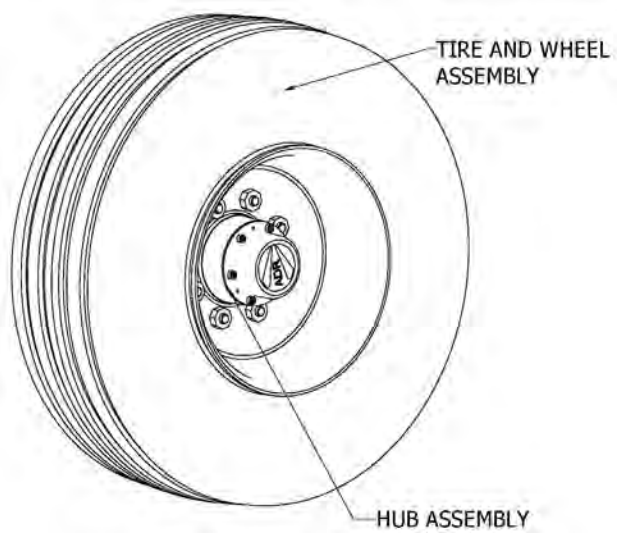

INDEPENDENT OSCILLATING AXLE SYSTEM (MODELS 3570, 3675, 3680)

It is recommended to grease the oscillating axle system with 5 pumps of grease every 8 hours or every 25 loads.

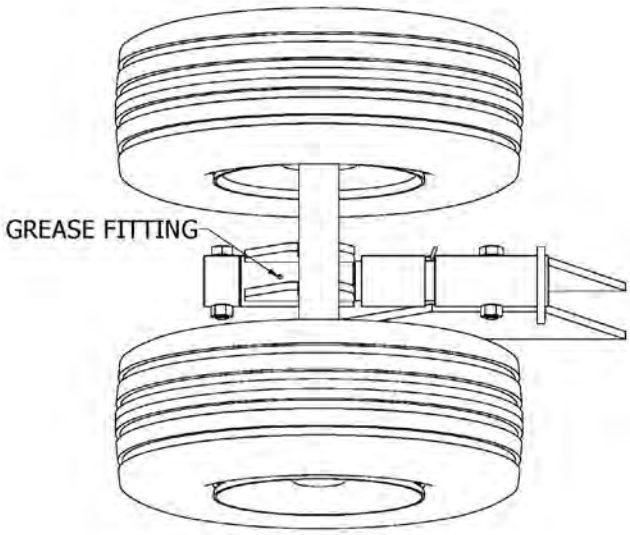

WALKING BEAM PIVOT PIN ASSEMBLY

(3680HD, 3690, 36100 & 36125)

It is recommended to grease the walking beam pivot pin assembly with 5 pumps of grease every 16 hours or every 50 loads.

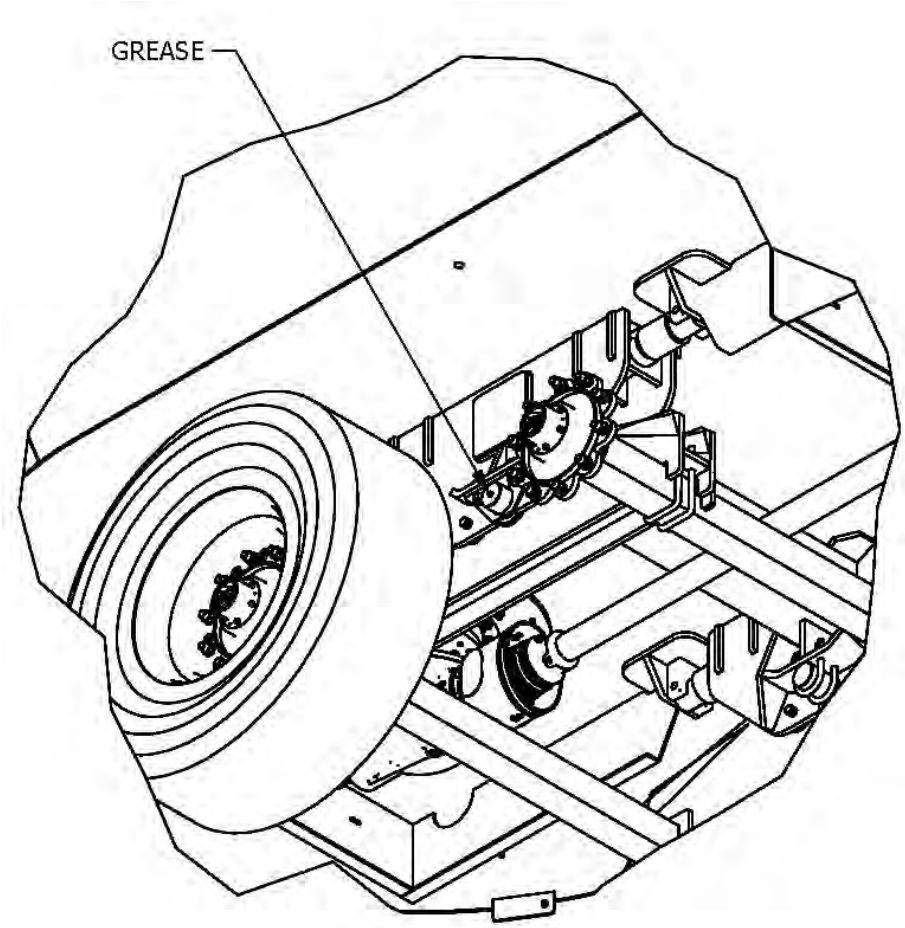

Implement Jack

All 3600 series Trailer Models are equipped with the same implement jack. For maximum service life of this assembly it is recommended to periodically grease the internal components of this assembly.

CONVEYOR LUBRICATION

All models equipped with an unloading conveyor will require greasing at the shaft bearings. These bearings will require 1 pump every 16 hours or 50 loads. Grease fitting locations are shown in the diagrams that follow:

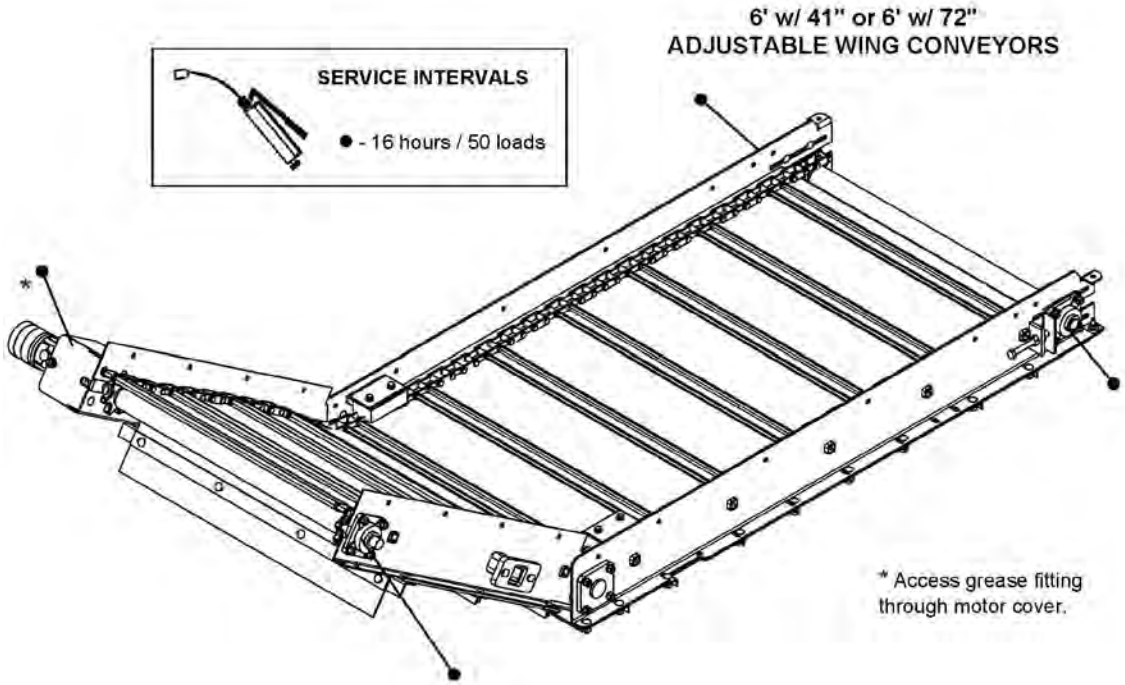

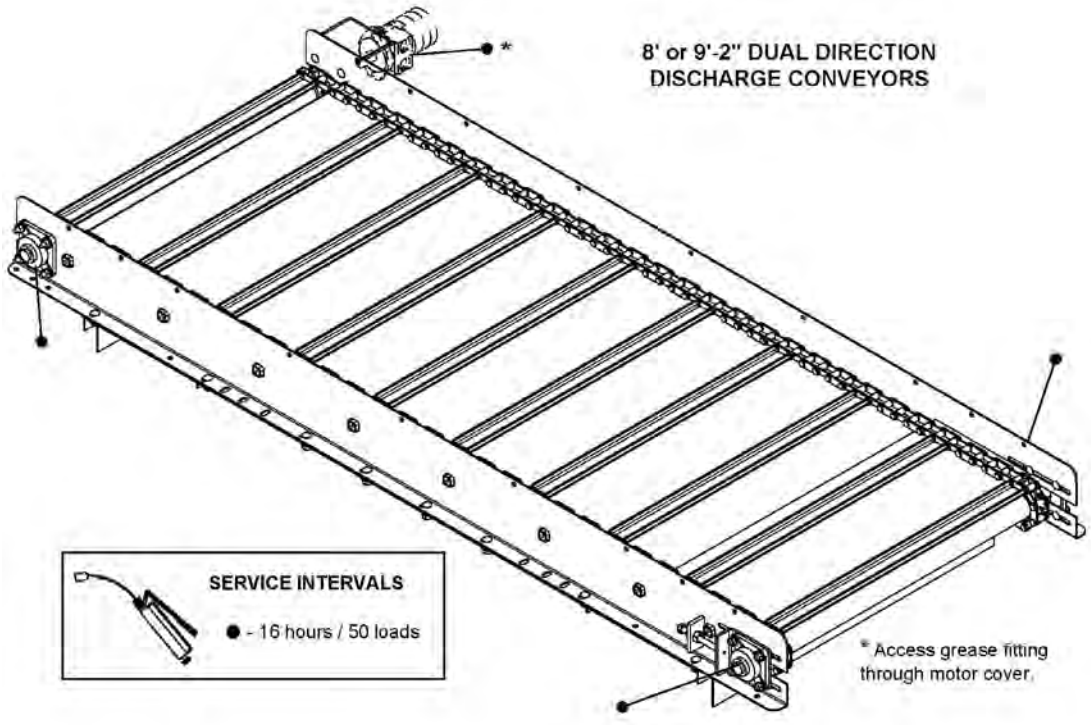

CONVEYOR MAINTENANCE

Sioux Automation 3600 series mixers are equipped with a hydraulically powered chain slat conveyor for unloading and distributing the mixed rations to the feeding area. While there are several unloading conveyor options available, service for each assembly is essentially the same.

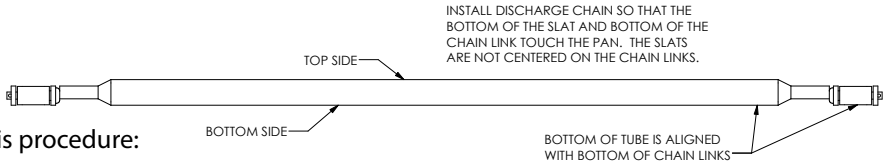

Conveyor Chain Tension

To adjust the conveyor chain tension, follow this procedure:

1. Clear the area of bystanders, especially small children.

2. Place all controls in neutral, stop the engine, set park brake, relieve hydraulic pressure, remove ignition key, and wait for all moving parts to stop before servicing, adjusting, repairing, or unplugging.

3. Chain Tension:

   a. The chain is set at the proper tension when it runs without jumping the drive sprockets.

   b. Pull up at the center of a span.

   c. The chain should come up approximately 1-1/2 inches (38 mm) when the chain tension is properly set.

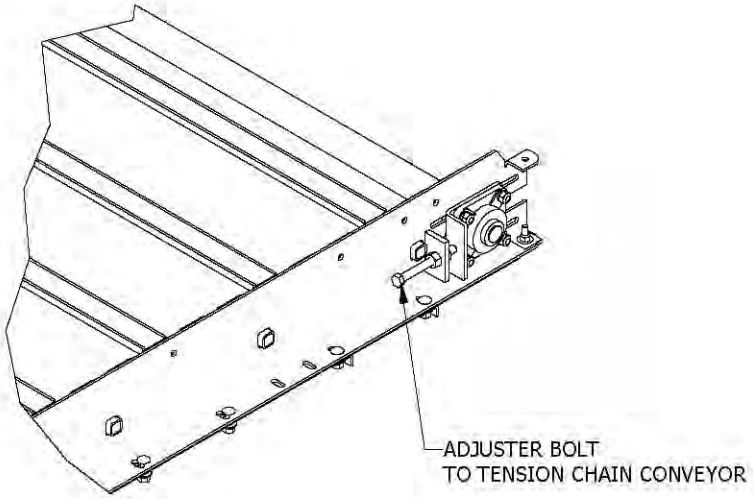

4. Setting:

   a. Loosen jam nuts on adjusting bolt.

   b. Loosen bearing housing anchor bolts.

   c. Slide or tap housing to the required position. Use adjusting bolt to move housing if required.

   d. Repeat with other housing.

Important: Always move both ends of the shaft the same amount to keep the shaft at right angles to the chain.

   e. Tighten bearing housings anchor bolts to their specified torque.

   f. Tighten adjusting bolt jam nuts to their specified torque.

Chain Coupler Drive Assembly

All unloading conveyors are equipped with a chain coupler drive assembly, which connects the output shaft of the hydraulic motor to the driveshaft assembly on the conveyor. Periodically inspect the condition of the chain coupler and components. Apply a light coating of grease to the chain coupler assembly to keep rust and other contaminants from deteriorating these components.

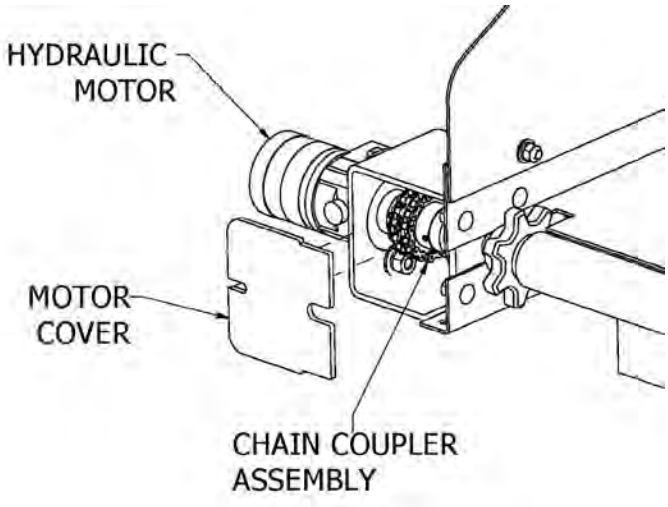

Unplugging (6' w/ 41", 6' w/60" and 6' w/ 72" Adjustable Wing Conveyors Only)

The conveyor is designed with a hinged access cap on the idler end (non-discharge end) of the conveyor. Check this area occasionally and remove accumulated material to prevent plugging. Follow this procedure when checking or unplugging the conveyor.

1. Clear the area of bystanders, especially small children.
2. Place controls in neutral, stop the engine, set park brake, relieve hydraulic pressure, remove ignition key, and wait for all moving parts to stop before servicing, adjusting, repairing, or unplugging.
3. Unpin and open access cap.
4. Remove all the material from the end of the conveyor.
5. Close, re-pin, and secure the conveyor access cap.

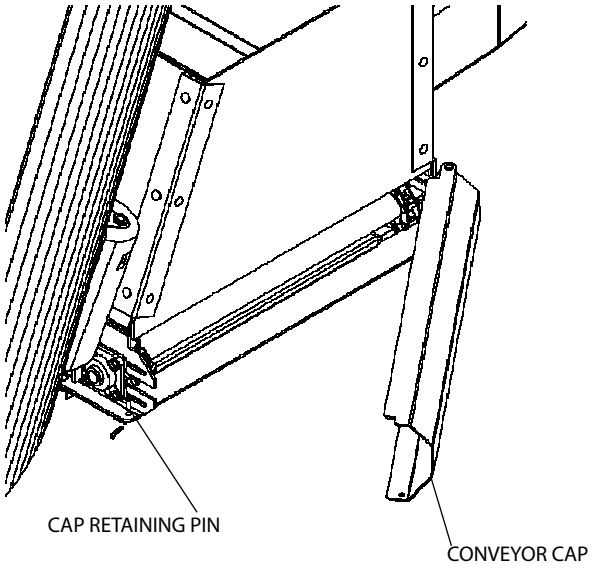

Magnet Chute Assembly (If equipped)

On machines equipped with the discharge magnet chute assembly, the magnet should be periodically cleaned off to remove all of the metal debris accumulated through machine operation.

Teflon Wear Blocks/Chain Guides (Left/Right Models Only)

Machines equipped with the 6' w/ 41" or 6' w/ 72" adjustable wing conveyors have Teflon wear blocks to keep the conveyor chain travelling close to the conveyor floor when the wing is tilted up.

The Teflon blocks are a wear item, and should be checked periodically to ensure proper conveyor chain operation and performance. The Teflon blocks are designed such that they can be unbolted and turned so that a new wear face is exposed, thus extending the life of the blocks. However, if the blocks are worn to a point where they can no longer be used, replace with new Teflon blocks which are available from your Sioux Automation dealer.

Important:	Operating the adjustable wing conveyor tilted at maximum height places additional stress and wear on the Teflon wear blocks.

Teflon Block Location on Wing Conveyors

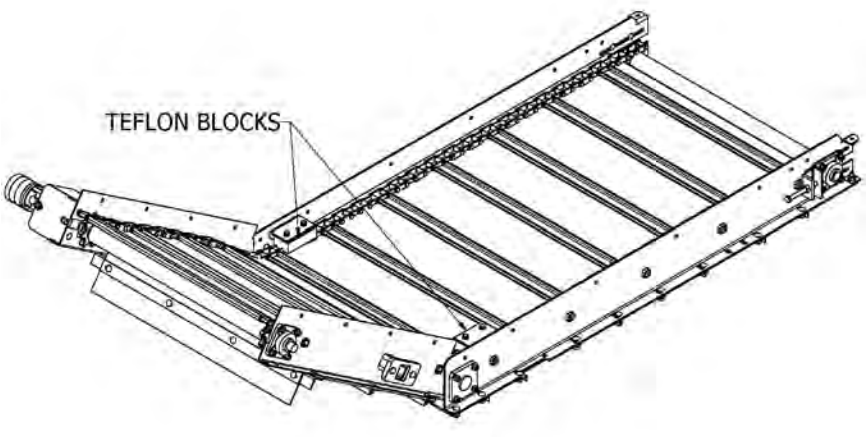

PLANETARY GEARBOX LUBRICATION

Bearing Tower Service

Every Sioux Automation 3600 series mixer is equipped with a grease-lubricated top bearing tower incorporated into the planetary gearbox assembly. The bearing tower requires grease 1 pump every 8 hours or 50 loads of operation. For convenience, the bearing tower is greased externally through a fitting located on the left hand side of the machine, as shown in the illustration that follows.

Important:
When greasing, be sure to inspect the condition of the grease line connected from the grease fitting to the bearing tower. Ensure that the bearing tower is taking grease. If the grease line has become split, cracked, and/or disconnected, repair and/or replace immediately.

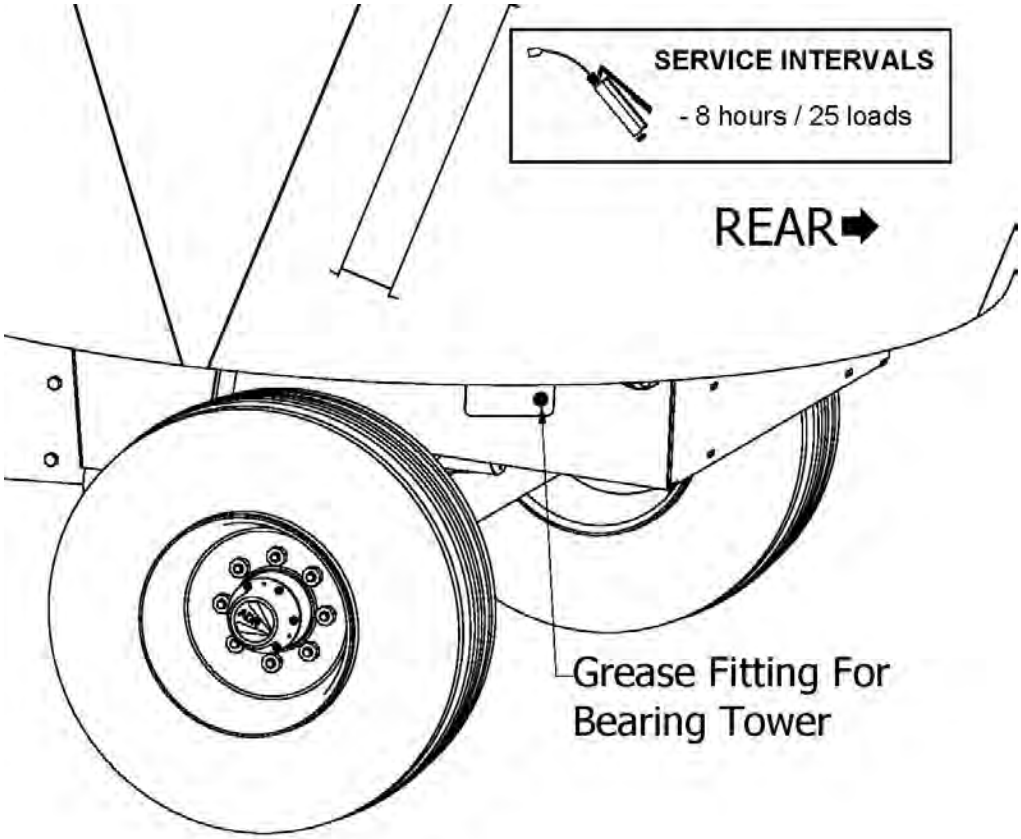

OIL LUBRICATION

Refer to the 'Fluids and Lubricants' section for the recommended oil to use in the drive components on your 3500 series mixer. Use the 'Maintenance and Service Record' provided to keep a record of all scheduled servicing.

3600 series mixer models 3640, 3645, 3650 and 3655 are equipped with a single planetary gearbox. Also, depending on the model, the machine may be equipped with a 2-speed transmission. Check each unit's oil level daily. Check for oil leaks every 8 hours or whenever the oil level drops rapidly. Inspect the oil condition for cloudiness and/or impurities. The first oil change should be made after approximately 50-100 working hours, and at least annually thereafter.

To maintain the gearbox, follow this procedure:

1. Clear the area of bystanders, especially small children.

2. Place all controls in neutral, stop the engine, set park brake, relieve hydraulic pressure, remove ignition key, and wait for all moving parts to stop before servicing, adjusting, repairing, or unplugging.

3. Checking Oil Level:

a. Planetary Gearbox:

Each gearbox is equipped with a special oil reservoir and breather mounted on the drum to eliminate maintenance on the gearbox itself. The oil level must be checked daily when the gearbox is cold and machine is level. Add oil through the vented cap as required to maintain the oil level between the lines as identified on the reservoir.

2-speed Transmission (Optional):

Each 2-speed transmission is equipped with a sight glass on the front for checking the oil level. Check daily when the gearbox is cold and the machine is level. Add oil through the breather plug hole to maintain the oil level in the middle of the sight glass. See page 28 for a list of suitable refill oils.

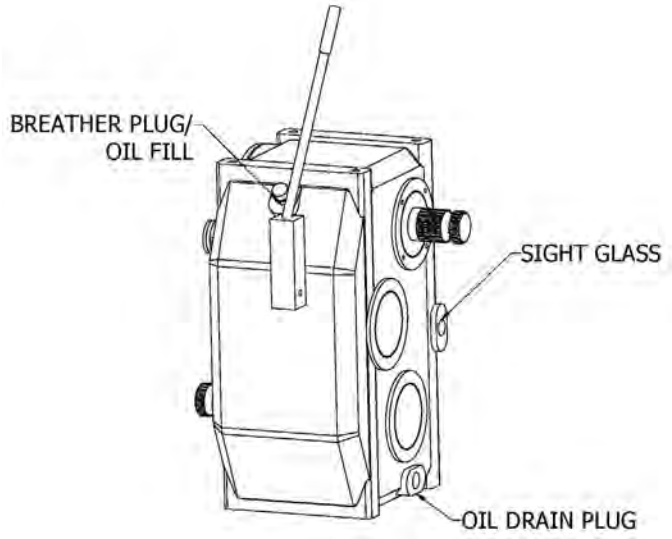

Important: If it is necessary to add oil frequently to maintain the required oil level, there is a leak in the system. Determine the source of the leak and correct before continuing to operate the machine. Contact your Sioux Automation Dealer should you require assistance.

Checking the Magnetic Plug:

If equipped, the gearbox may have a magnetic plug designed to collect and trap metallic contaminants from the lubricating oil. The magnetic plug is usually the oil drain plug. It is recommended that the plug be removed 25 hours after new and then every 100 hours or twice annually and cleaned to remove contaminants from the system. To clean the plug, follow this procedure:

a. Have a rubber plug available that will fit into and act as a stopper in the plug hole when the plug is removed.

b. Place a pan under the plug to collect any spilled oil.

c. Remove the magnetic plug.

d. Quickly install the rubber plug to minimize loss of oil.

e. Examine the material collected on the magnet. There should be only a small clump of material sticking on the magnet. A small clump will indicate the system is functioning well. If there are large pieces of cuttings or chips on the magnet, change the oil in the gearbox immediately to remove contaminants. Refill with clean oil. Contact your dealer or distributor for assistance in troubleshooting, repairing, or replacing the gearbox.

f. Clean the plug.

g. Remove rubber plug, install magnetic plug and tighten to its specified torque.

h. Dispose of the oil in an environmentally friendly manner.

Refilling Planetary Gearbox and Reservoir:

The oil in the gearbox should be changed at least annually. However, if there is a leak, so much oil may be lost that the system may have to be virtually refilled. Also if metal contaminants are found on the magnetic plug, the system should be drained and refilled with clean oil. See page 28 for a list of suitable refill oils. When refilling or changing oil, follow this procedure:

a. Place a large pan or pail under the drain (magnetic plug). Remember, the system holds 22L (5.8 US gallons) of oil. However, the 36125 system holds 15L (4 US gallons) of oil.
b. Remove plug and allow sufficient time for the system to drain.
c. Dispose of the used oil in an environmentally safe manner.
d. Clean the magnetic plug and reinstall. Tighten plug to its specified torque.
e. Clean around the breather on the reservoir. Remove the breather and its mounting bushing.
f. Remove the connecting hose at the reservoir assembly that runs to the base of the planetary.
g. Using a hand pump, pump in approximately 19 liters (5.01 US gallons) in the 3640 to 36100 trailer gearbox, or 12 liters (3.17 US gallons) in the 36125 trailer gearbox. The total system volume is 22 liters (5.81 US gallons) for the 3640 to 36100, and 15 liters (4 US gallons) for the 36125. Fill remaining oil through the reservoir(s) on the side of the box until oil level holds within the operating range lines on the reservoir. Note that if the system is cool , oil volume should be near the lower line.
h. Reassemble the reservoir and breather assembly.
i. Using a funnel, fill the reservoir. Refill the reservoir until the oil level stabilizes.
j. Clean the breather, reinstall and tighten to its specified torque.

Note:

If you are unable to pump oil it may all be added through the reservoir; however, this can take up to 24 hours.
The reservoir will slowly feed oil into the gearbox through the connecting hose.
The gearbox fills slowly so the reservoir will have to be refilled several times.

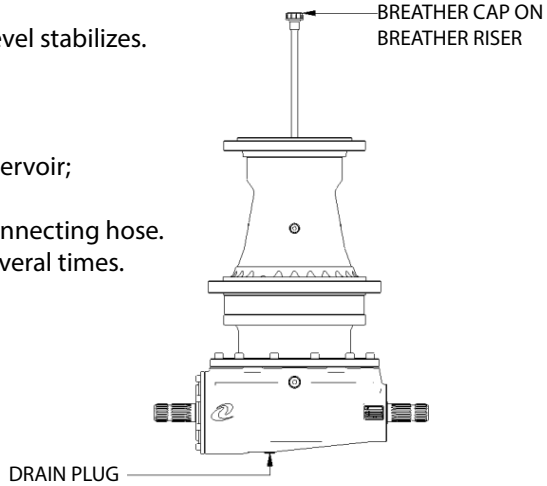

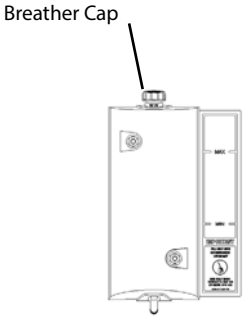

Important:	Monitor the oil level closely during the first few hours of use. Refill the reservoir as required to maintain the proper level.

Refilling 2-Speed Transmission (If equipped):

a. Place a large pan or pail under the drain (magnetic plug).

b. Remove plug and allow sufficient time for the system to drain.

c. Dispose of the used oil in an environmentally safe manner.

d. Clean the magnetic plug and reinstall. Tighten plug to its specified torque.

e. Clean around the breather/fill plug. Remove and inspect the breather to ensure that it is functioning properly.

f. Using a funnel, fill the transmission to the level of the sight glass. The sight glass is the correct oil level for the transmission. The 2-speed transmission will hold approximately 10 litres (2.6 US gallons).

Breather/Filter Assembly:

Each planetary gearbox oil reservoir is designed with a breather/filter assembly on the top to vent the internal system pressure to atmosphere. It must be kept clean and free of contaminants and debris to function properly. Remove any debris that falls on the breather whenever it happens to allow it to vent. Remove and clean every 200 hours of operation, twice annually, or if the gearbox lubrication system develops a leak. To maintain the breather, follow this procedure:

a. Visually check the breather every day. Remove any material that falls on top of the breather and acrylic oil reservoir. Keep clean and clear to allow for free flow of air for venting the internal system pressure to atmosphere.

Important: Oil is added to the lubrication system through the breather hole. Always clean around the breather prior to removing it and adding oil.

b. Cleaning Breather:

Clean the breather every 200 hours of operation, twice annually, or whenever the lubrication system develops a leak.

i. Clean the top of the oil reservoir.

ii. Remove breather and bushing.

iii. Disassemble breather.

iv. Remove any buildup in the breather passages and clean the foam using a mild detergent.

v. Reassemble and install in reservoir. Tighten to its specified torque.

Important: When spraying water to clean the mixer, protect the breather and reservoir to avoid contamination.

AUGER MAINTENANCE

Every 3600 series mixer is designed with a vertical auger that can be equipped with knives for cutting material.

Knife Maintenance

To maintain knives, follow this procedure:

1. Clear the area of bystanders, especially small children.

2. Place all controls in neutral, stop the engine, set park brake, relieve hydraulic pressure, remove ignition key, and wait for all moving parts to stop before servicing, adjusting, repairing, or unplugging.

3. Install new knives and tighten mounting bolts to their specified torque.

4. Keep knives in good condition. Replace if chipped, dull, or damaged in any way.

5. Knife sharpening is not recommended. Each knife has hardened surfaces on the upper side that keep it sharp.

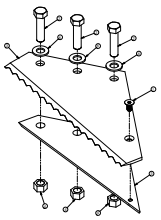

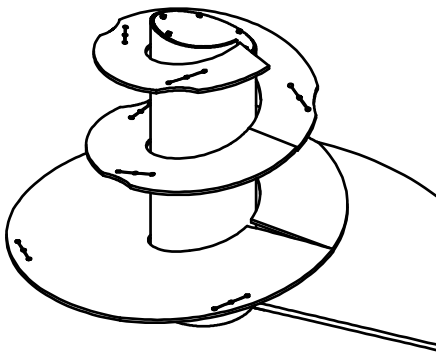

Operating Hint:

Knife wear is greater on the knives located near the bottom of the auger than those found near the top of the auger. To extend the service life of the knives, rotate the lower knives with the upper knives. This way all knives will have a chance to wear evenly to a point where they will all have to be replaced.

GREASING

Unless specified otherwise components should have on pump of grease after every 16 loads or 50 hours. Use SAE multi-purpose high temperature grease with extreme pressure (EP) characteistics on all areas requiring grease lubrication.

1. Wipe grease fitting clean before greaseing to avoid injecting dirt and grit.

2. Replace and repair broken fittings immediately.

3. If fittings will not take grease replace them immediately.

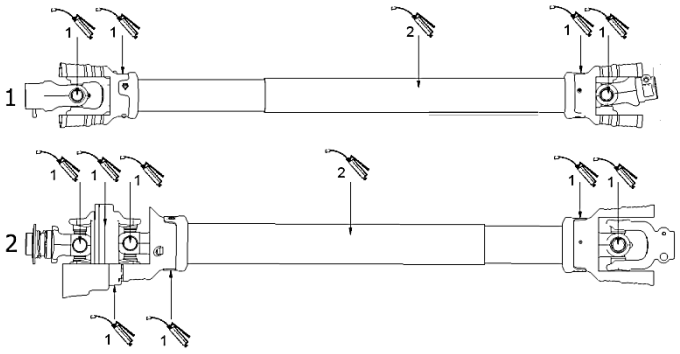

PTO Shaft Grease Locations

1. **Standard PTO Shaft**
2. **Constant Velocity Joint PTO Shaft.**

1 Grease one pump after every 8 hours or 25 loads

2 Grease one pump after every 16 hours or 50 loads

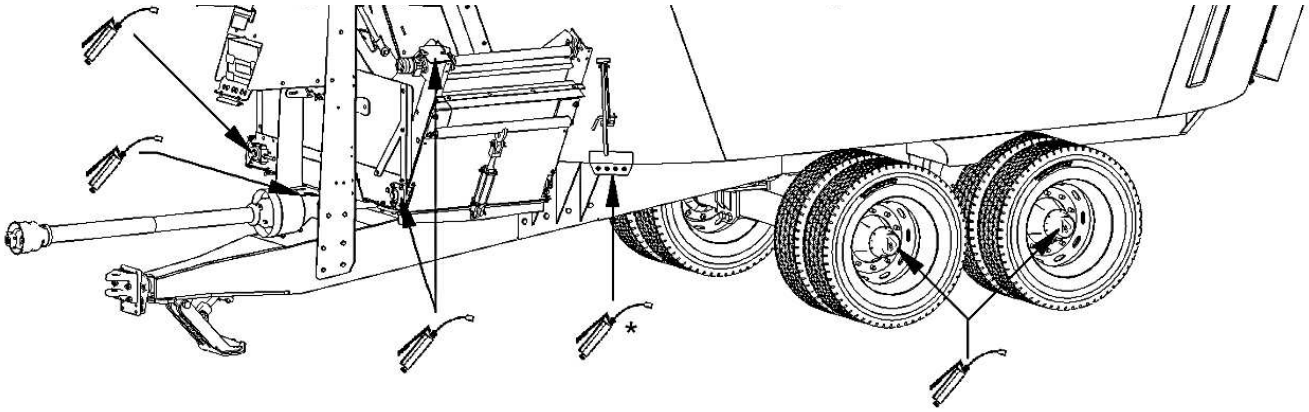

Grease Points on Twin Auger Mixer

*-Indicates central grease locations for gearboxes and walking beam hinge pins.

Note: There are a total of 6 bearings on the conveyor that need to be greased. The 3 not labled are directly opposite of the ones that have been.

GREASING

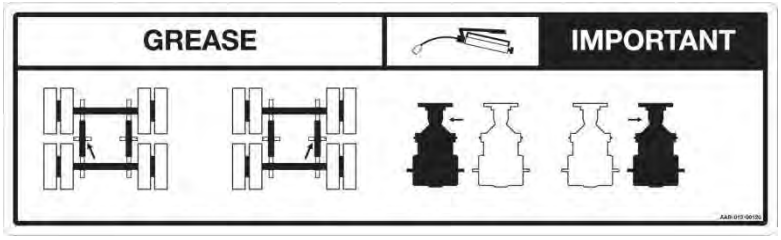

Central Grease Decal

From left to right:

1. **Left Side Walking Beam Hinge Pin**
2. **Right Side Walking Beam Hinge Pin**
3. **Front Planetary Reducer Gearbox**
4. **Rear Planetary Reducer Gearbox**

*-Gearbox should be freased 1 pump evert 8 hours or 25 loads.

When creating a mainenance schedule please keep in mind:

Wheel hubs should be greased periodically and repacked yearly. If the mixer is running through muddy, sandy, dusty or wet conditions often, intervals should be increased.

When greasing the gearbox through the grease line mounted underneath the mixing chamber in the front left corner be sure to nispect the integrity of the line. If it is split, cracked and/or disconnected replace the line immediately.

HD trailere models are equipped with two driveshaft assemblies. Depending on the options specified, grease locations will vary. Grease is required at each cross or "u"-joint found on the driveshaft. Crosses will require **1 pump every 16 hours or 50 loads.** Refer to the previous illustrations for zerk locations.

Important: The service intervals shown are typical. Always follow the instructions supplied with the PTO Shaft for full service information.

Important: When greasing the crosses on the driveshafts, always inspect the condition of the yoke assemblies. Apply grease to contact areas if required, check connections, and check condition of the shear bolt if applicable.

All unloading conveyors are equipped with a chain coupler drive assembly, which connects the output shaft of the hydraulic motor to the driveshaft assembly on the conveyor. Periodically inspect the condition of the chain coupler and components. Apply a light coating of grease to the chain coupler assembly to keep rust and other contaminants from deteriorating them.

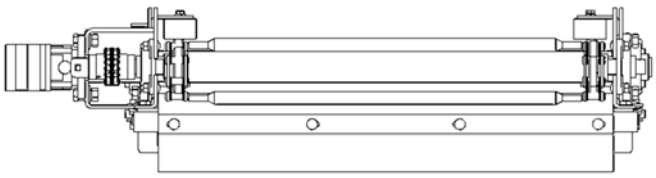

WHEEL MAINTENANCE

Tire Air Pressure

All tires should be inflated to the manufacturers recommended pressure. The inflation pressure will be on the tire and/or in the chart below. Ensure all tires are at the recommended pressure. Allowable load capacity and maximum tire pressures for conventional and wide base tires are based on TRA standards. Inflation values are based on cold pressures.

445/50R22.5 (per tire)
Load Rating: 10,196lbs (4625kg) at 25mph (40km/h)
Max Pressure: 120 psi 8.3 bar 830 kPa

275/70R22.5 (per tire in dual configuration)
Load Rating: 6,393lbs (2900kg) at 25mph (40km/h)
Max Pressure: 120 psi 8.3 bar 830 kPa

435/50R19.5 (per tire)
Load Rating: 9,920lbs (2900kg) at 25mph (40km/h)
Max Pressure: 120psi 8.3 bar 830 kPa

WARNING: Never over inflate tires and keep a safe distance while inflating. Over inflation can result in the tire exploding which could result in serious injury or death.

Wheel Maintenance

Wheel condition should be visually inspected before every use along with periodically conducted more thorough checks. If any cracks are detected in a rim it should be replaced immediately.

Wheel nuts need to be retightened routinely after:

1. First use
2. First laden journey
3. Every week

The wheel nuts on all HD models should be torqued to 424 lb ft (575Nm) in a star pattern. Power tools should only be used if they can be precisely and accurately set to the correct torque.

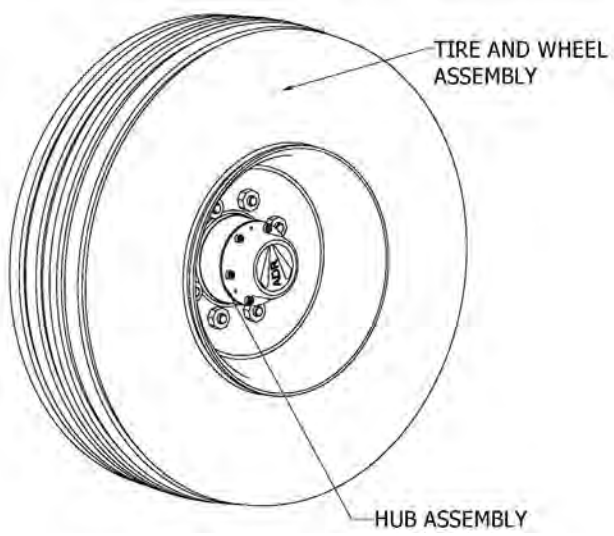

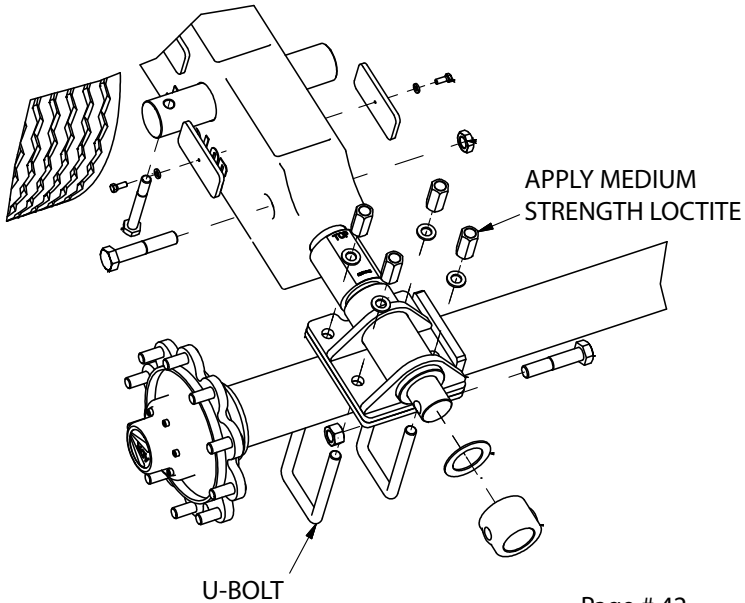

Walking Beam U-Bolts

These U-bolts are istalled with medium strength loctite so that the U-bolt contacts the axle but allows the axle to move slightly during articulation of the walking beam. **DO NOT tighten these nuts to full torque specifications.** These nuts should contact only. If the nuts are loose, remove, reapply medium strength loctite, and reinstall.

Inspect U-bolts and U-bolt nuts every 6 months for movement.

FINAL TRAILER ASSEMBLIES AND OPTIONS

PART #	DESCRIPTION
VM900291	3640 FINAL TRAILER ASSEMBLY
VM900292	3645 FINAL TRAILER ASSEMBLY
VM900293	3650 FINAL TRAILER ASSEMBLY
VM900294	3655 FINAL TRAILER ASSEMBLY
VM900295	3670 FINAL TRAILER ASSEMBLY
VM900296	3675 FINAL TRAILER ASSEMBLY

PART #	DESCRIPTION
VM900297	3680 FINAL TRAILER ASSEMBLY
VM900297-1	3680 HD FINAL TRAILER ASSEMBLY
VM900298	3690 FINAL TRAILER ASSEMBLY
VM900299	36100 FINAL TRAILER ASSEMBLY
VM900300	36125 FINAL TRAILER ASSEMBLY

PACKAGE	VM900291 QTY (3640)	VM900292 QTY (3645)	VM900293 QTY (3650)	VM900294 QTY (3655)	VM900295 QTY (3670)	VM900296 QTY (3675)	VM900297 QTY (3680)	VM900297-1 QTY (3680HD)	VM900298 QTY (3690)	VM900299 QTY (36100)	VM9000300 QTY (36125)	PART #	DESCRIPTION
MAIN ASSEMBLY ITEMS	1	1	1	1	1	1	1	1	1	1	1		BASE MODEL
	2	2	2	2	2	2	2	2	2	2	2	SPLP3822	PTO SQUARE PIN LOCK
	2	2	2	2	2	2	2	2	2	2	2	VM100659	CYLINDER STOP
	1	1	1	1	1	1	1	1	1	1	1	VM100945	38.5" SHIELD EXTENSION BRACKET
	1	1	1	1	1	1	1	1	1	1	1	VM600027	MANUAL
	1	0	0	0	0	1	1	0	0	0	0	VM900196-1	90 " TAIL LIGHT KIT
	0	0	1	0	1	0	0	1	0	0	0	VM900196-2	96"TAIL LIGHT KIT
	0	1	0	1	0	0	0	0	0	1	1	VM900193-3	102"TAIL LIGHT KIT
COMPONENTS SELECTED BASED ON CUSTOMER REQUEST AT PLACEMENT OF ORDER													
DISCHARGE PACKAGE	1	1	1	1	1	1	1	1	1	1	1	VM800285	6' 41" DISCHARGE ASSEMBLY
	1	1	1	1	1	1	1	1	1	1	1	VM800286	6' 60" DISCHARGE ASSEMBLY
	1	1	1	1	1	1	1	1	1	1	1	VM800287	6' 72" DISCHARGE ASSEMBLY
	1	0	0	0	0	1	1	1	0	0	0	VM800288	8' FLAT DISCHARGE ASSEMBLY
	1	1	1	1	1	1	1	1	1	1	1	VM800289	9' FLAT DISCHARGE ASSEMBLY
	1	1	1	1	1	1	1	1	1	1	1	VM800323	8' 6" DUAL SLIDE DISCHARGE ASSEMBLY
	1	1	1	1	1	1	1	1	1	1	1	VM800324	6' 41" SLIDE INCLINE DISHARGE ASSEMBLY
DRIVE PACKAGE	1	1	0	0	0	0	0	0	0	0	0	VM900199	540RPM 35R PTO, 1-3/8
	0	0	1	1	1	1	0	0	0	0	0	VM900136	540RPM 55E PTO, 1-3/8
	0	0	0	0	0	0	1	1	1	1	1	VM900137	1000RPM 55E PTO, 1-3/8
	0	0	0	0	0	0	1	1	1	1	1	VM900138	1000RPM 55E PTO, 1-3/4
SCALE PACKAGE	1	1	1	1	1	1	1	0	0	0	0	VM900236-1	3 BAR SCALE KIT
	0	0	0	0	0	0	0	1	1	1	1	VM900236-2	5 BAR SCALE KIT
	1	1	1	1	1	1	1	0	0	0	0	VM900237-1	3 BAR SCALE KIT WITH REMOTE
	0	0	0	0	0	0	0	1	1	1	1	VM900237-2	5 BAR SCALE KIT WITH REMOTE
	1	1	1	1	1	1	1	0	0	0	0	VM900238-1	3 BAR WEIGHT SCALE KIT
	0	0	0	0	0	0	0	1	1	1	1	VM900238-2	5 BAR WEIGHT SCALE KIT
	1	1	1	1	1	1	1	0	0	0	0	VM900239-1	3 BAR WEIGHT SCALE KIT WITH REMOTE
	0	0	0	0	0	0	0	1	1	1	1	VM900239-2	5 BAR WEIGHT SCALE KIT WITH REMOTE
	1	1	1	1	1	1	1	1	0	0	0	VM900386-1	3 BAR WEIGHT SCALE KIT
	0	0	0	0	1	1	1	1	1	1	1	VM900386-2	5 BAR WEIGHT SCALE KIT
	1	1	1	1	1	1	1	1	0	0	0	VM900387-1	3 BAR WEIGHT SCALE KIT WITH REMOTE
	0	0	0	0	1	1	1	1	1	1	1	VM900387-2	BAR WEIGHT SCALE KIT WITH REMOTE

FINAL TRAILER ASSEMBLIES AND OPTIONS

SALES OPTIONS (OPTIONAL COMPONENTS)													
PACKAGE	VM900291 QTY (3640)	VM900292 QTY (3645)	VM900293 QTY (3650)	VM900294 QTY (3655)	VM900295 QTY (3670)	VM900296 QTY (3675)	VM900297 QTY (3680)	VM900297-1 QTY (3680HD)	VM900298 QTY (3690)	VM900299 QTY (36100)	VM9000300 QTY (36125)	PART #	DESCRIPTION
DISCHARGE OPTIONS	1	1	1	1	1	1	1	1	1	1	1	VM700238	41" DISCHARGE SKID PLATE WELDMENT
	1	1	1	1	1	1	1	1	1	1	1	VM800032	26" MAGNETIC DISCHARGE CHUTE ASSEMBLY
	1	1	1	1	1	1	1	1	1	1	1	VM900151	DEFLECTOR ASSEMBLY FOR DISCHARGE
	1	1	1	1	1	1	1	1	1	1	1	VM900195	MAGNETIC DISCHARGE ASSEMBLY
	1	1	1	1	1	1	1	1	1	1	1	VM900260	RH FLAT FLAP DISCHARGE DEFLECTOR KIT
	1	1	1	1	1	1	1	1	1	1	1	VM900330	DUAL APRON CHAIN CAP HYDRAULIC DROP KIT
	1	1	1	1	1	1	1	1	1	1	1	VM900320	APRON CHAIN FLAP KIT FOR WING DISCHARGE
HYD OPTIONS	1	1	1	1	1	1	1	1	1	1	1	VM800140	REMOTE DIVERTER VALVE
EXTENSION OPTIONS	1	0	0	0	0	0	0	0	0	0	0	VM900181-1	12"TALL RUBBER EXTENSION KIT
	0	1	1	0	0	0	0	0	0	0	0	VM900181-2	12"TALL RUBBER EXTENSION KIT
	0	0	0	1	0	0	0	0	0	0	0	VM900181-3	12"TALL RUBBER EXTENSION KIT
	0	0	0	0	0	1	1	1	0	0	0	VM900181-4	12"TALL RUBBER EXTENSION KIT
	0	0	0	0	1	0	0	0	1	0	0	VM900181-5	12"TALL RUBBER EXTENSION KIT
	0	0	0	0	0	0	0	0	0	1	1	VM900181-6	12"TALL RUBBER EXTENSION KIT
	1	0	0	0	0	0	0	0	0	0	0	VM900181-7	8"TALL RUBBER EXTENSION KIT
	0	1	1	0	0	0	0	0	0	0	0	VM900181-8	8"TALL RUBBER EXTENSION KIT
	0	0	0	1	0	0	0	0	0	0	0	VM900181-9	8"TALL RUBBER EXTENSION KIT
	0	0	0	0	0	1	1	1	0	0	0	VM900181-10	8"TALL RUBBER EXTENSION KIT
	0	0	0	0	1	0	0	0	1	0	0	VM900181-11	8"TALL RUBBER EXTENSION KIT
	0	0	0	0	0	0	0	0	0	1	1	VM900181-12	8"TALL RUBBER EXTENSION KIT
DRIVE OPTIONS	1	1	1	1	1	1	1	1	1	1	1	VM900379	2 SPEED SHIFT KIT
	0	0	0	0	0	0	0	0	0	1	1	VM900301	1.8:1 GEARBOX KIT
	0	0	0	0	0	0	0	0	1	0	1	VM900302	1.8:1 GEARBOX KIT
	1	1	1	1	1	1	1	1	0	0	0	VM900323	1.3:1 GEARBOX KIT
	1	1	1	1	1	1	1	1	0	0	0	VM900324	1.8:1 GEARBOX KIT
	1	1	1	1	1	1	0	0	0	0	0	VM900325	1.8:1. 2.7:1 GEARBOX KIT
BATTERY KIT	1	1	1	1	1	1	1	1	1	1	1	VM900213	BATTERY SCALE POWER KIT

LADDER ASSEMBLIES

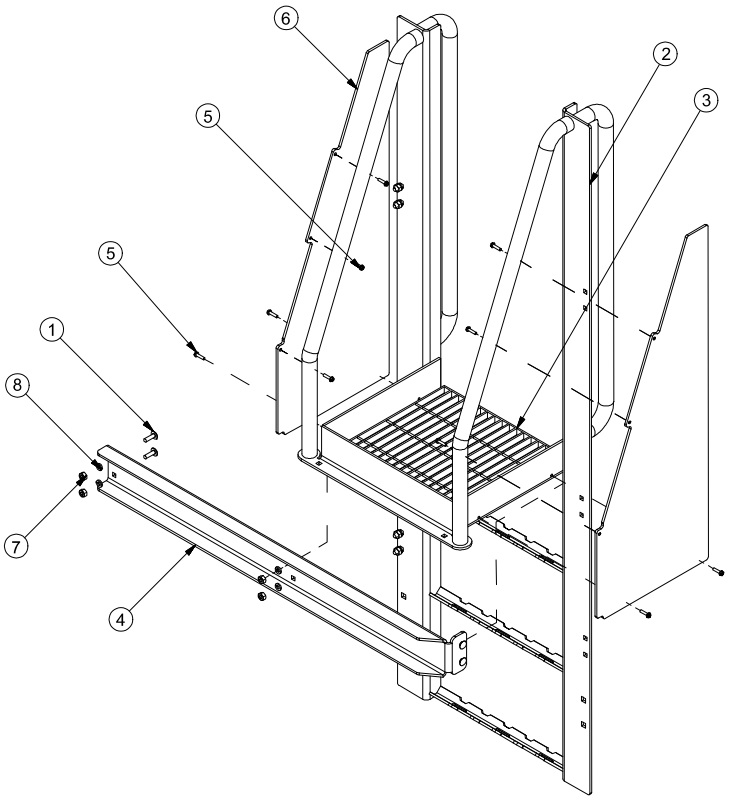

STANDARD LADDER
CAN BE USED ON ALL MODELS

ITEM #	QTY.	PART #	DESCRIPTION
1	10	BLT38X114CNC	3/8X1-1/4 CARRIAGE BOLT
2	1	VM700274	LADDER
3	1	VM100656	PLATFORM
4	1	VM100657	SUPPORT BRACKET
5	10	SP14X1TS	1/4X1 TAPPING SCREW
6	2	VM100658	SIDE SHIELD
7	10	NUT38NC	3/8" NUT
8	10	WSH38LOCK	3/8" LOCK WASHER

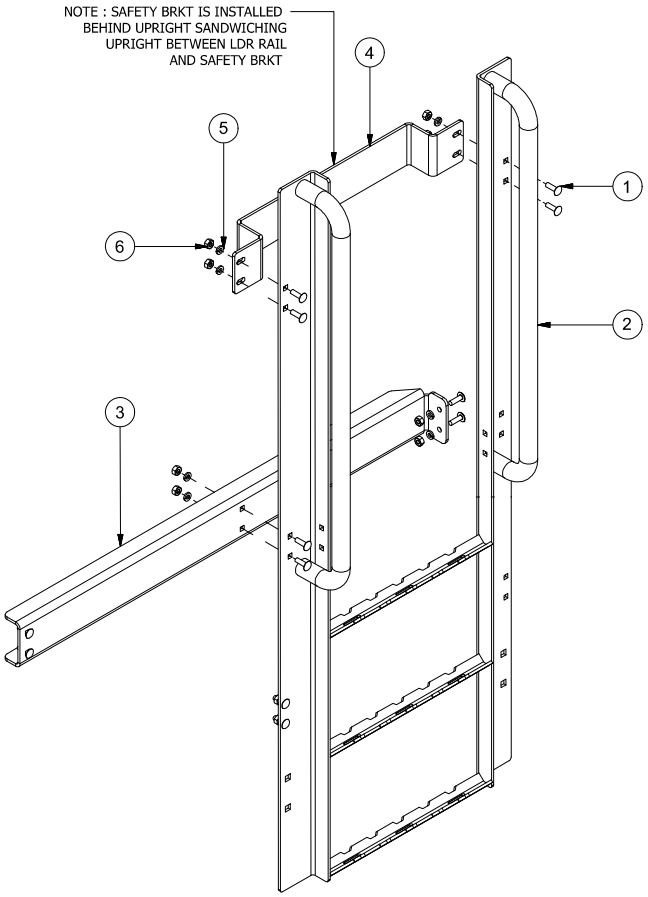

LOW PROFILE LADDER
OPTIONAL FOR MODELS 3645 & 3670

ITEM #	QTY.	PART #	DESCRIPTION
1	12	BLT38X114CNC	3/8X1-1/4 CARRIAGE BOLT
2	1	VM700272	LADDER
3	1	VM100657	SUPPORT BRACKET
4	1	VM100686	SAFETY BRACKET
5	12	WSH38LOCK	3/8 LOCK WASHER
6	12	NUT38NC	3/8" NUT

FRONT FRAME ASSEMBLY

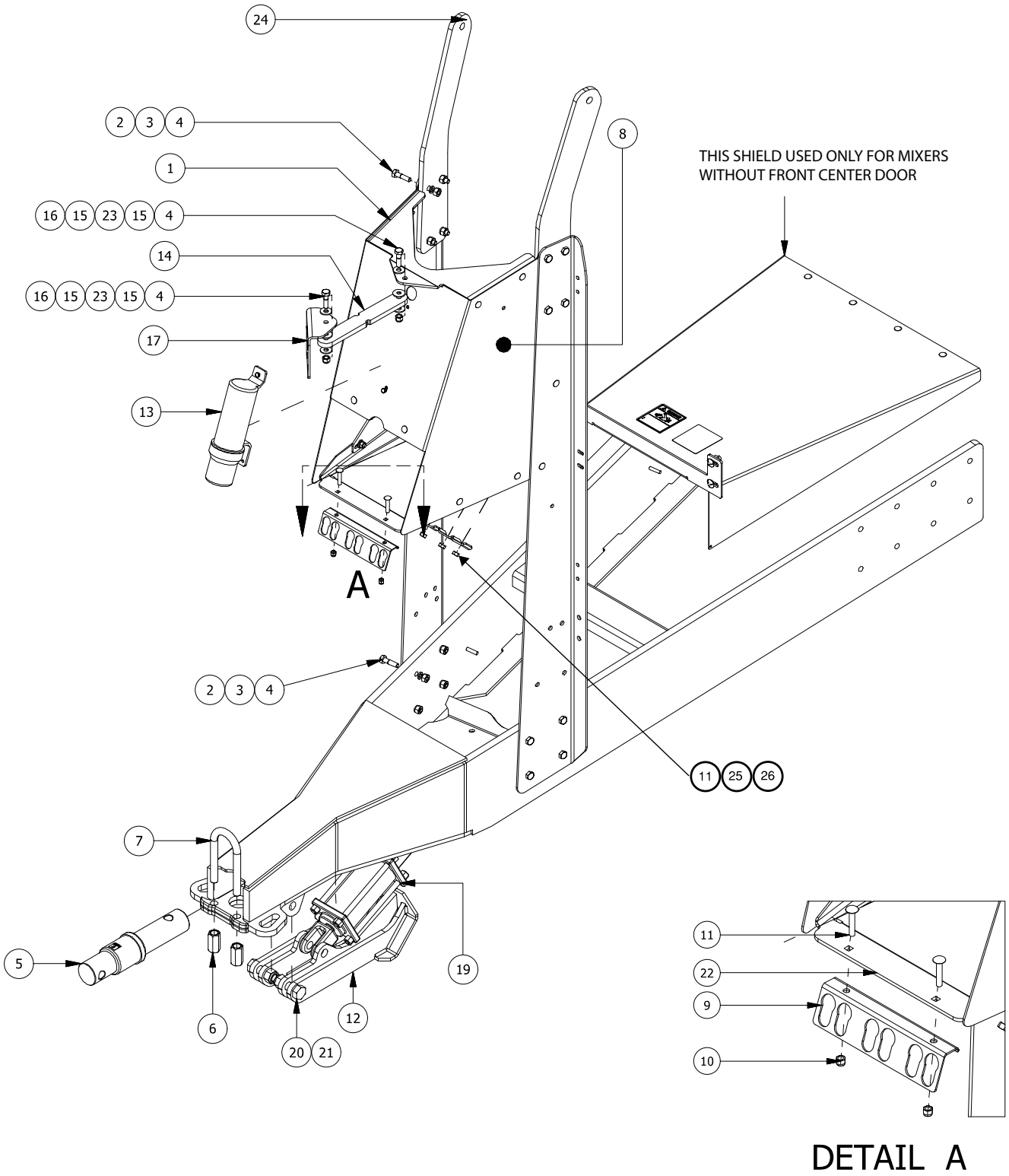

FRONT FRAME ASSEMBLY

ITEM #	3640 QTY.	3645 QTY.	3650 QTY.	3655 QTY.	3670 QTY.	3675 QTY.	3680 QTY.	3690 QTY.	36100 QTY.	36125 QTY.	PART #	DESCRIPTION
1	1	1	1	1	1	1	1	1	1	1	VM100649	HOOD CAP
2	18	18	18	18	18	18	18	16	16	16	NUT12NC	1/2" NUT
3	18	18	18	18	18	18	18	16	16	16	WSH12LOCK	1/2" LOCK WASHER
4	10	10	10	10	10	10	10	18	18	18	BLT12X2NC	1/2X2 BOLT
5	1	1	1	1	1	1	1	-	-	-	SCA9690257	WEIGH BAR
	-	-	-	-	-	-	-	1	1	1	SCA9690261	WEIGH BAR
6	-	-	-	-	-	-	-	2	2	2	NUTCOUP78X212NF	7/8X2-1/2 COUPLING NUT, NF
7	-	-	-	-	-	-	-	1	1	1	VM800356	7/8X2-15/16 U BOLT, NF
8	1	1	1	1	1	1	1	1	1	1	VM100650	36 SERIES HOOD
9	1	1	1	1	1	1	1	1	1	1	VM100652	HOSE CLAMP BRACKET
10	3	3	3	3	3	3	3	3	3	3	NUT38LOCKNC	3/8" LOCK NUT
11	5	5	5	5	5	5	5	5	5	5	BLT38X2NC	3/8X2 NUT
12	-	-	-	-	-	-	-	1	1	1	VM700307	JACK FOOT
13	1	1	1	1	1	1	1	1	1	1	MON800531	MANUAL CANISTER
14	1	1	1	1	1	1	1	1	1	1	VM100653	SCALE HEAD ARM
15	4	4	4	4	4	4	4	4	4	4	WSH12FLAT	1/2" FLAT WASHER
16	2	2	2	2	2	2	2	2	2	2	NUT12LOCKNC	1/2" LOCK NUT
17	1	1	1	1	1	1	1	1	1	1	VM100184	SCALE HEAD BRACKET
19	-	-	-	-	-	-	-	1	1	1	VM800354	HYDRAULIC CYLINDER
20	-	-	-	-	-	-	-	2	2	2	BLT1X3NCG8	1X3 NC GR8 BOLT
21	-	-	-	-	-	-	-	2	2	2	NUT1LOCKG8	1" LOCK NUT, GR 8
22	1	1	1	1	1	1	1	1	1	1	VM100651	HOOD BOTTOM
23	2	2	2	2	2	2	2	2	2	2	WSH12FLATUHMW	1/2" PLASTIC WASHER
24	2	-	-	-	-	2	2	-	-	-	VM100643	UPPER ATTACHMENT ARM
	-	-	-	2	-	-	-	-	-	-	VM100644	UPPER ATTACHMENT ARM
	-	-	2	-	-	-	-	-	-	-	VM100645	UPPER ATTACHMENT ARM
	-	-	-	-	2	-	-	-	-	-	VM100646	UPPER ATTACHMENT ARM
	-	2	-	-	-	-	-	-	-	-	VM100647	UPPER ATTACHMENT ARM
	-	-	-	-	-	-	-	2	2	2	VM100747	UPPER ATTATCHMENT ARM
25	3	3	3	3	3	3	3	3	3	3	VM100648	HOSE CLIP
26	3	3	3	3	3	3	3	3	3	3	NUT38NC	3/8" NUT
27	1	1	1	1	1	1	1	-	-	-	VM900359	STANDARD HITCH ASSEMBLY
	-	-	-	-	-	-	-	1	1	1	VM900289	HD HITCH ASSEMBLY
28	1	1	1	1	-	-	-	-	-	-	VM700273	JACK BRACKET
29	1	1	1	1	-	-	-	-	-	-	VM800460	8000LB SIDEWIND JACK

HITCH ASSEMBLIES

VM900359

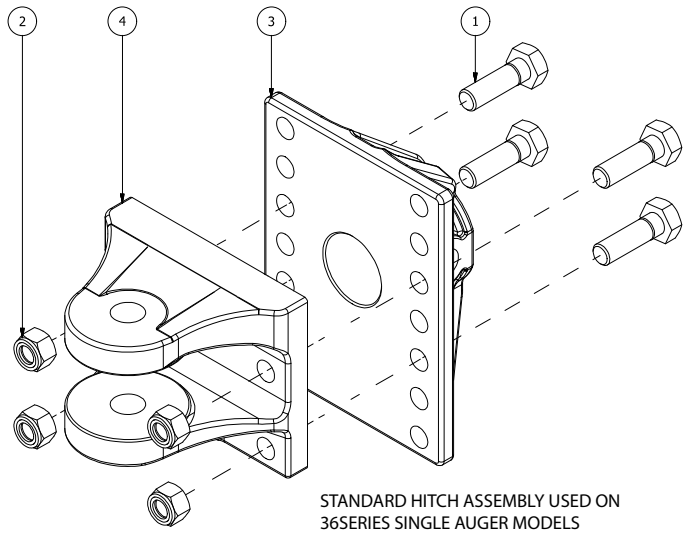

STANDARD HITCH ASSEMBLY USED ON 36SERIES SINGLE AUGER MODELS

ITEM #	QTY.	PART #	DESCRIPTION
1	4	BLT34X212NCG8	3/4X2-1/2 NC G8 BOLT
2	4	NUT34LOCKNCG8	3/4" G8 NC LOCK NUT
3	1	VM800321	HITCH PLATE
4	1	VM800320	CLEVIS HITCH

VM900289

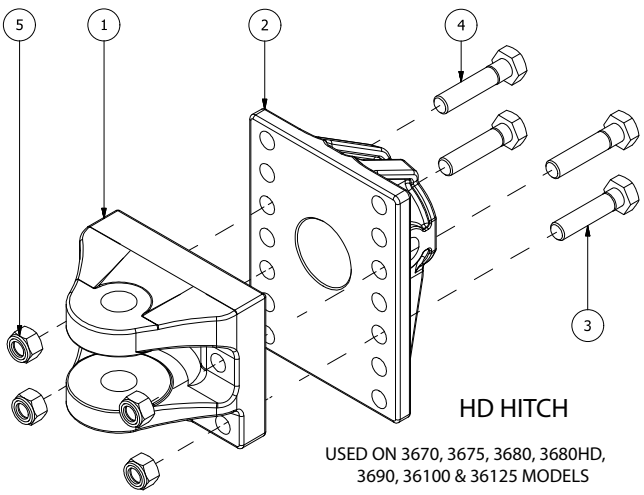

HD HITCH

USED ON 3670, 3675, 3680, 3680HD, 3690, 36100 & 36125 MODELS

ITEM #	QTY.	PART #	DESCRIPTION
1	1	VM800325	HD CLEVIS HITCH
2	1	VM800326	HD HITCH PLATE
3	2	BLT34X314NCG8	3/4X3-1/4 NC G8 BOLT
4	2	BLT34X312NCG8	3/4X3-1/2 NC G8 BOLT
5	4	NUT34LOCKG8	3/4" G8 LOCK NUT

REAR DISCHARGE DOOR ASSEMBLY

PART #	DESCRIPTION	APPLICABLE MODELS
VM900190-1	90" DIA REAR DOOR KIT	3640, 3675, 3680
VM900190-2	96" DIA REAR DOOR KIT	3650, 3670, 3690
VM900190-3	102" DIA REAR DOOR KIT	3645, 3655, 36100, 36125

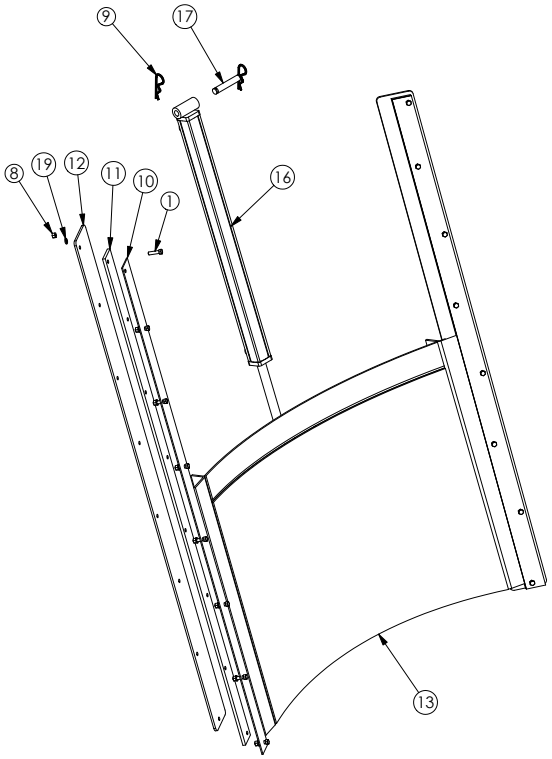

ITEM #	-1 QTY.	-2 QTY.	-3 QTY.	PART #	DESCRIPTION
1	16	16	16	BLT38X112NC	3/8X1-1/2 BOLT
2	1	1	1	HYD6400-8-10	ADAPTER
3	1	1	1	HYD6402-8-8	ADAPTER
4	1	1	1	HYD6602-8-8-8	TEE ADAPTER
5	2	2	2	HYD6801-8-10	ELBOW ADAPTER
6	1	1	1	HYD6801-8-8	ELBOW ADAPTER
7	2	2	2	HYDS7115	COUPLER TIP
8	16	16	16	NUT38NC	3/8" NUT
9	4	4	4	SPHPN316	3/16" HAIR PIN CLIP
10	2	2	2	VM100174	DOOR GUIDE SHIM
11	2	2	2	VM100175	.25 DOOR GUIDE SHIM
12	2	2	2	VM100176	DOOR GUIDE
13	1	0	0	VM700060	90" DIA DOOR
	0	1	0	VM700061	96" DIA DOOR
	0	0	1	VM700062	102" DIA DOOR
14	1	1	1	VM700080	HYDRAULIC HOSE
15	2	2	2	VM700089	HYDRAULIC HOSE
16	1	1	1	VM800476	30" CYLINDER (SIDE PORTS)
17	2	2	2	VM800057	CYLINDER PIN
18	1	1	1	VM800068	RELIEF VALVE
19	16	16	16	WSH38LOCK	3/8" LOCK WASHER

DISCHARGE DOOR ASSEMBLY

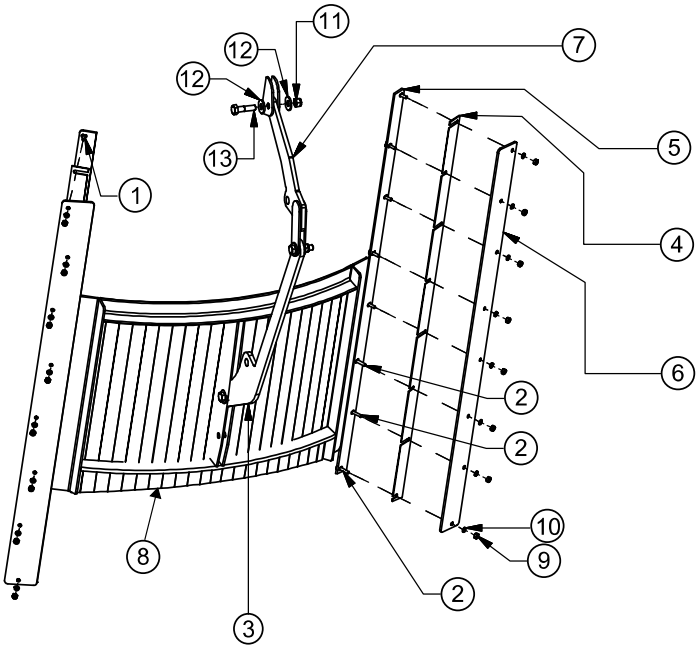

ITEM #	QTY.	PART #	DESCRIPTION
1	10	BLT38X112CNC	3/8X1-1/2 CARRIAGE BOLT
2	6	NUT38X2CNC	3/8X2 CARRIAGE BOLT
3	1	VM100283	LOWER DOOR LIFT ARM
4	2	VM100174	.13 MIDDLE DOOR SPACER (3640,3650,3655,3675,3680, 3690,36100,36125)
	2	VM100684	.13 MIDDLE DOOR SPACER (3645,3670)
5	2	VM100175	.25 INNER DOOR SPACER (3640,3650,3655,3675,3680, 3690,36100,36125)
	2	VM100683	.25 INNER DOOR SPACER (3645,3670)
6	2	VM100176	.25 OUTER DOOR GUIDE (3640,3650,3655,3675,3680, 3690,36100,36125)
	2	VM100685	.25 OUTER DOOR GUIDE (3645,3670)
7	1	VM700265	UPPER DOOR LIFT ARM (3640,3650,3655,3675,3680, 3690,36100,36125)
	1	VM700286	UPPER DOOR LIFT ARM (3645,3670)
8	1	VM700266	3640,3675,3680 FRONT DOOR
	1	VM700267	3645 LP FRONT DOOR
	1	VM700268	3655,36100,36125 FRONT DOOR
	1	VM700269	3650,3690 FRONT DOOR
	1	VM700270	3670 LP FRONT DOOR
9	16	NUT38NC	3/8" NUT
10	16	WSH38LOCK	3/8" LOCK WASHER
11	3	NUT34NYLOCKNC	3/4" LOCK NUT
12	6	WSH34FLAT	3/4" FLAT WASHER
13	3	BLT34X3NC	3/4X3 BOLT

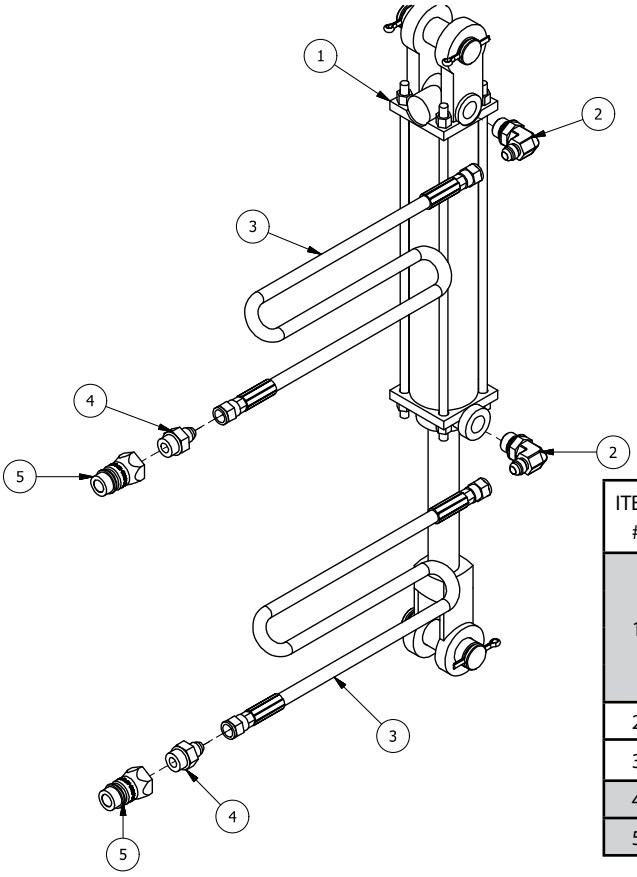

PART #	DESCRIPTION
VM900328	FRONT DOOR HYDRAULIC KIT (FITS MODELS 3640,3650,3655,3675,3680, 3690,36100,36125)
VM900329	LOW PROFILE FRONT DOOR HYDRAULIC KIT (FITS MODELS 3645 & 3670)

ITEM #	VM900328 QTY.	VM900329 QTY.	PART #	DESCRIPTION
1	1	0	HYDPMC9012	12" CYLINDER
	FOR ABOVE CYLINDER		HYDPMCK9000	SEAL KIT
	0	1	HYDPMC8410	10" CYLINDER
	FOR ABOVE CYLINDER		HYDPMCK8400	SEAL KIT
2	2	2	HYD6801-6-8	ADAPTER
3	2	2	STI570187	HYDRAULIC HOSE
4	2	2	HYD6400-6-8	ADAPTER
5	2	2	HYDS7115	ADAPTER TIP

AUGER ASSEMBLIES

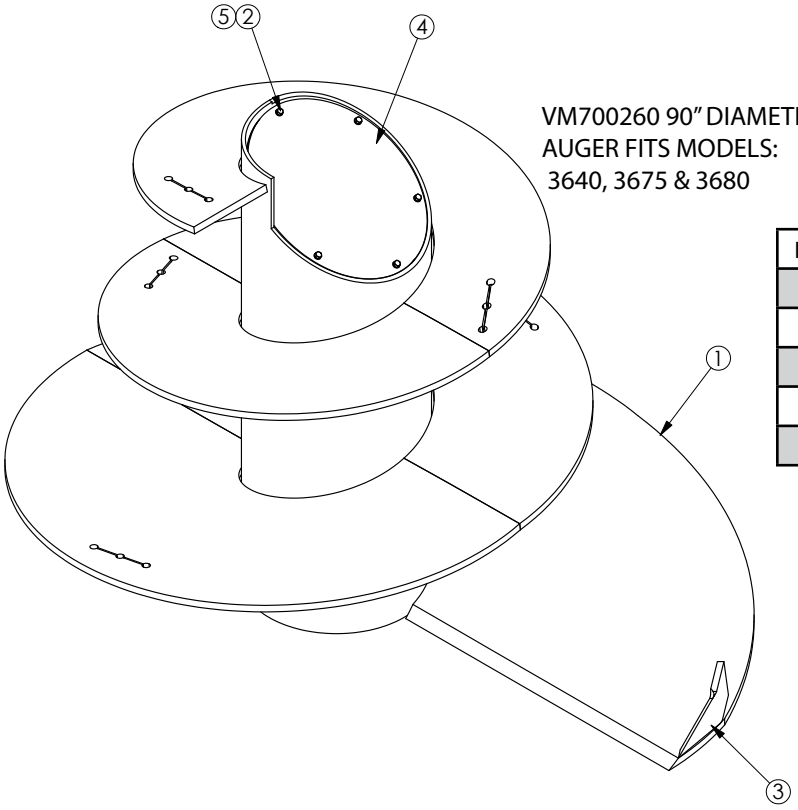

VM700260 90" DIAMETER
AUGER FITS MODELS:
3640, 3675 & 3680

ITEM #	QTY.	PART #	DESCRIPTION
1	1	VM700260	90 DIA AUGER
2	6	BLT38X112NC	3/8X1-1/2 BOLT
3	1	VM100188	ANGLE BLADE
4	1	VM100635	AUGER COVER
5	6	WSH38LOCK	3/8" LOCK WASHER

EACH AUGER WILL REQUIRE THE FOLLOWING
MOUNTING FLANGE: VM100615 QTY 3

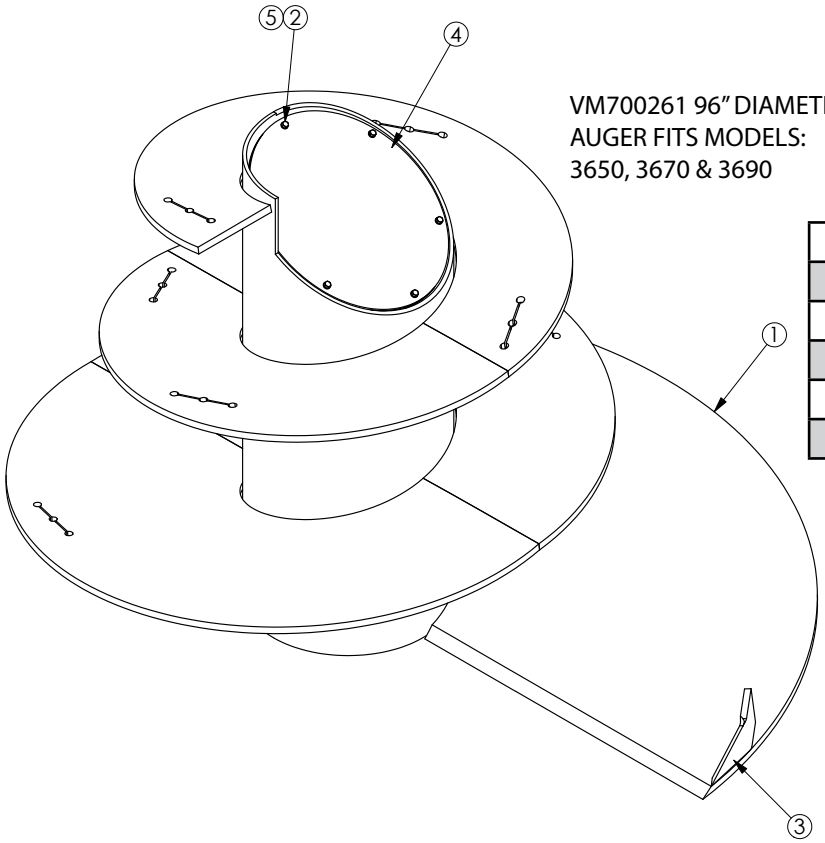

VM700261 96" DIAMETER
AUGER FITS MODELS:
3650, 3670 & 3690

ITEM #	QTY.	PART #	DESCRIPTION
1	1	VM700261	96 DIA AUGER
2	6	BLT38X112NC	3/8X1-1/2 BOLT
3	1	VM100188	ANGLE BLADE
4	1	VM100637	AUGER COVER
5	6	WSH38LOCK	3/8" LOCK WASHER

EACH AUGER WILL REQUIRE THE FOLLOWING
MOUNTING FLANGE: VM100638 QTY 3

AUGER ASSEMBLIES

VM700262 102" DIAMETER
AUGER FITS MODELS:
3645, 3655 & 36100

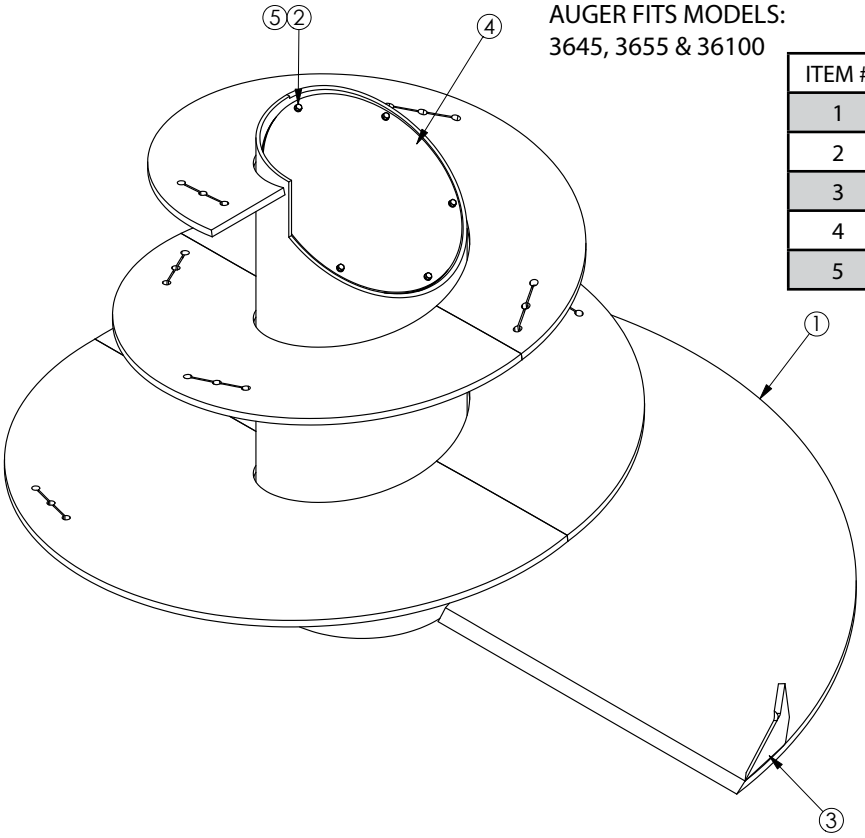

ITEM #	QTY.	PART #	DESCRIPTION
1	1	VM700262	102 DIA AUGER MS50
2	6	BLT38X112NC	3/8X1-1/2 BOLT
3	1	VM100188	ANGLE BLADE
4	1	VM100637	AUGER COVER
5	6	WSH38LOCK	3/8" LOCK WASHER

EACH AUGER WILL REQUIRE THE FOLLOWING
MOUNTING FLANGE: VM100638 QTY 3

VM700263 102" DIAMETER
AUGER FITS MODEL 36125

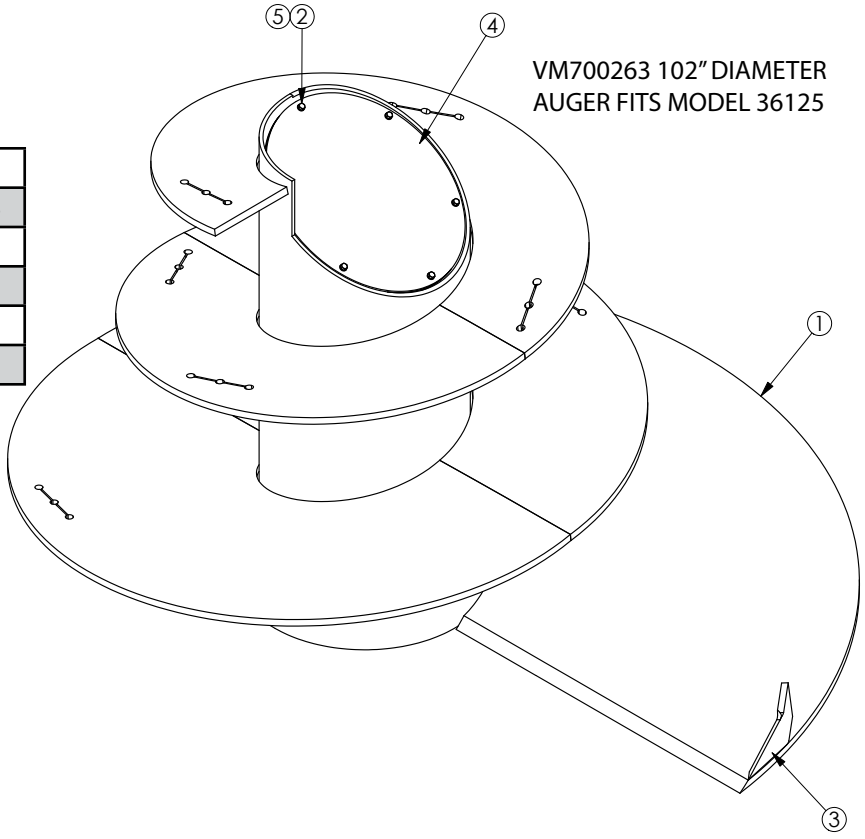

ITEM #	QTY.	PART #	DESCRIPTION
1	1	VM700263	102 DIA AUGER MS83
2	6	BLT38X112NC	3/8X1-1/2 BOLT
3	1	VM100188	ANGLE BLADE
4	1	VM100637	AUGER COVER
5	6	WSH38LOCK	3/8" LOCK WASHER

EACH AUGER WILL REQUIRE THE FOLLOWING
MOUNTING FLANGE: VM100638 QTY 3

AUGER ASSEMBLIES

INSTALLING REPLACEMENT AUGERS:

STEP 1 - REMOVE OLD AUGER.

STEP 2 - CUT FLANGES AND ANGLE BLADE OFF OF THE TOP SURFACE OF BOTTOM FLIGHT. (THESE PARTS ARE TACK WELDED HERE FOR SHIPPING PURPOSES.) REMOVE THE AUGER COVER PLATE AND SET ASIDE FOR NOW.

STEP 3 - TIGHTLY BOLT FLANGES TO THE TOP OF THE GEARBOX. REFER TO FIGURE B.
NOTE: NOT ALL GEARBOXES WILL LOOK LIKE THIS NOR ARE THEY ALL THE SAME HEIGHT INSIDE THE TUBE, BUT THEY ALL HAVE A FLAT AREA THAT THE FLANGES WILL BOLT TO.

STEP 4 - PLACE THE AUGER OVER THE GEARBOX AND AROUND THE FLANGES. SHIMS NEED TO BE PLACED UNDER THE AUGER TUBE (IN AT LEAST 3 PLACES) SUCH THAT THE INSIDE LEADING EDGE OF THE BOTTOM AUGER FLIGHT IS LOCATED AT .19 TO .31 INCHES FROM THE FLOOR OF THE MIXER. REFER TO FIGURES A AND B.

STEP 5 - PLACE SHIMS IN BETWEEN THE OD OF THE FLANGES AND THE ID OF THE TUBE IN AT LEAST 3 LOCATIONS. (REFER TO FIGURE B.) THIS WILL CENTER THE AUGER TUBE ON THE FLANGES. TACK WELD THE FLANGES TO THE TUBE.

STEP 6 - REMOVE THE SHIMS FROM UNDER THE AUGER TUBE AND ROTATE THE AUGER 360 DEGREES TO VERIFY THAT THE INSIDE LEADING EDGE OF THE AUGER IS .19 TO .31 INCHES ABOVE THE FLOOR THROUGH THE FULL ROTATION OF THE AUGER. IF THIS CLEARANCE IS NOT MAINTAINED, READJUST THE SHIMS AND REMOVE AND REPLACE THE TACK WELDS ON THE FLANGES AS NECESSARY.

STEP 7 -ONCE AGAIN, REMOVE THE SHIMS FROM UNDER THE AUGER TUBE AND ROTATE THE AUGER 360 DEGREES CHECKING TO ENSURE THAT THE .19 TO .31 INCH CLEARANCE WITH THE FLOOR IS MAINTAINED. PLACE A SOLID FILLET WELD AT THE CONNECTION OF THE FLANGES TO THE ID OF THE AUGER TUBE. IF THERE IS TOO MUCH OR TOO LITTLE CLEARANCE AT THE OUTSIDE LEADING EDGE OF THE BOTTOM AUGER FLIGHT, THE FLIGHT MAY NEED TO BE PHYSICALLY MANIPULATED. IF THIS IS REQUIRED, CONTACT THE SIOUX AUTOMATION CENTER SERVICE DEPARTMENT FOR GUIDANCE.

STEP 8 -LOCATE THE ANGLE BLADE (SHOWN IN FIGURE C) ON THE TOP SURFACE OF THE BOTTOM AUGER FLIGHT. TAKE ALL MEASUREMENTS FROM THE VERTICAL SIDEWALL OF THE MIXER. TACK WELD IN POSITION.
NOTE: THE ANGLE BLADE MUST BE PERPENDICULAR TO THE BOTTOM AUGER FLIGHT.

STEP 9 -ROTATE THE AUGER 360 DEGREES TO ENSURE THE ANGLE BLADE DOES NOT CONTACT ANY PART OF THE MIXER WALLS. IF THE ANGLE BLADE CONTACTS ANYTHING, REMOVE THE TACK WELDS AND ADJUST THE BLADE POSITION AS NECESSARY. ONCE THE AUGER CAN BE ROTATED WITHOUT THE ANGLE BLADE MAKING CONTACT WITH ANYTHING, WELD THE BLADE FULLY IN PLACE.

NOTE: FOR TWIN AUGER MIXERS, THE TWO LEADING EDGES OF THE AUGER NEED TO BE IN LINE WITH EACH OTHER. (SEE FIGURE D)

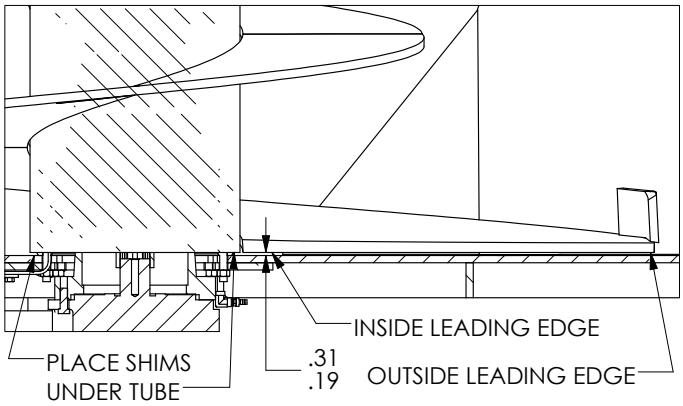

FIGURE A

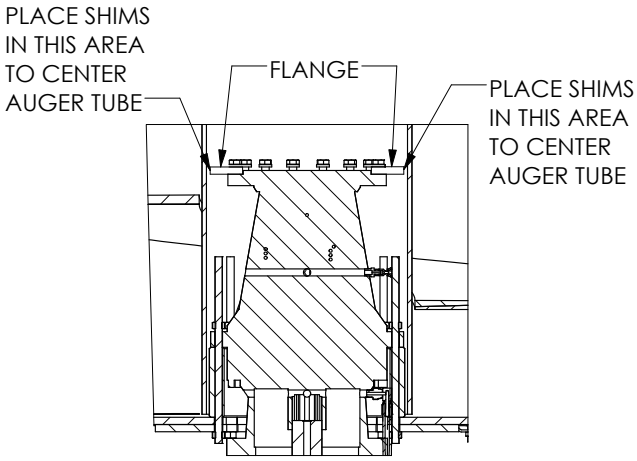

FIGURE B

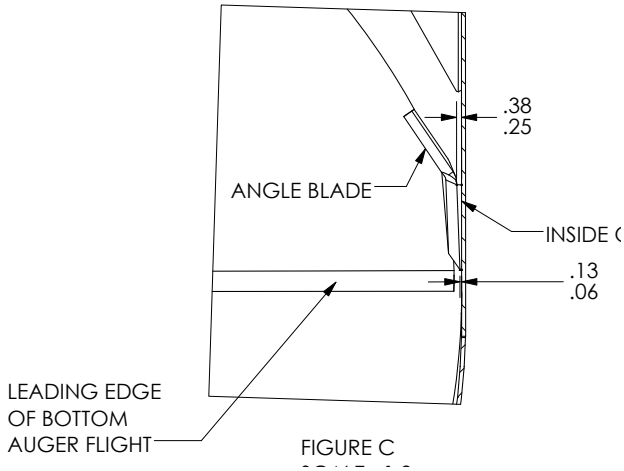

FIGURE C

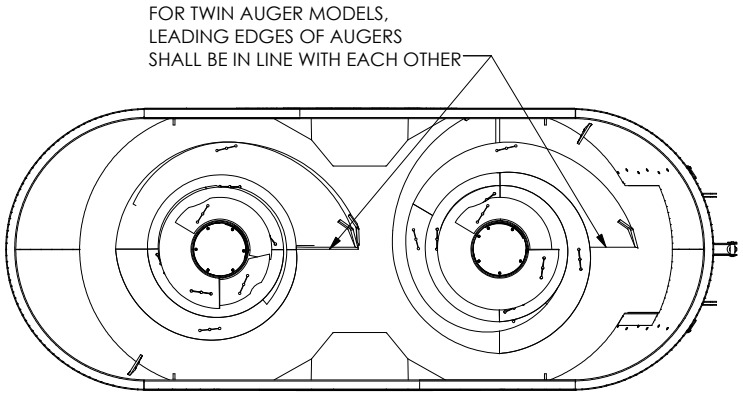

FIGURE D

AUGER KNIFE ASSEMBLIES

PART #	DESCRIPTION	APPLICABLE MODEL #S
VM900321-1	90" UNIVERSAL KNIFE KIT	3675
VM900321-2	96" UNIVERSAL KNIFE KIT	3690
VM900321-3	102" UNIVERSAL KNIFE KIT	36100, 36125

ITEM #	-1 QTY	-2 QTY	-3 QTY	PART #	DESCRIPTION
1	5	7	9	BLT38X114NC	3/8X1-1/4 BOLT
2	15	21	27	BLT58X212NC	5/8X2-1/2 BOLT
3	5	7	9	NUT38LOCKNC	3/8" LOCK NUT
4	15	21	27	NUT58LOCKNC	5/8" LOCK NUT
5	5	7	9	SAC60548	UNIVERSAL KNIFE
6	5	7	9	SAC60549	KNIFE SUPPORT
7	15	21	27	WSH58FLATG8	G8 5/8" FLAT WASHER

NOTE: KITS ARE IN PER AUGER QUANTITIES

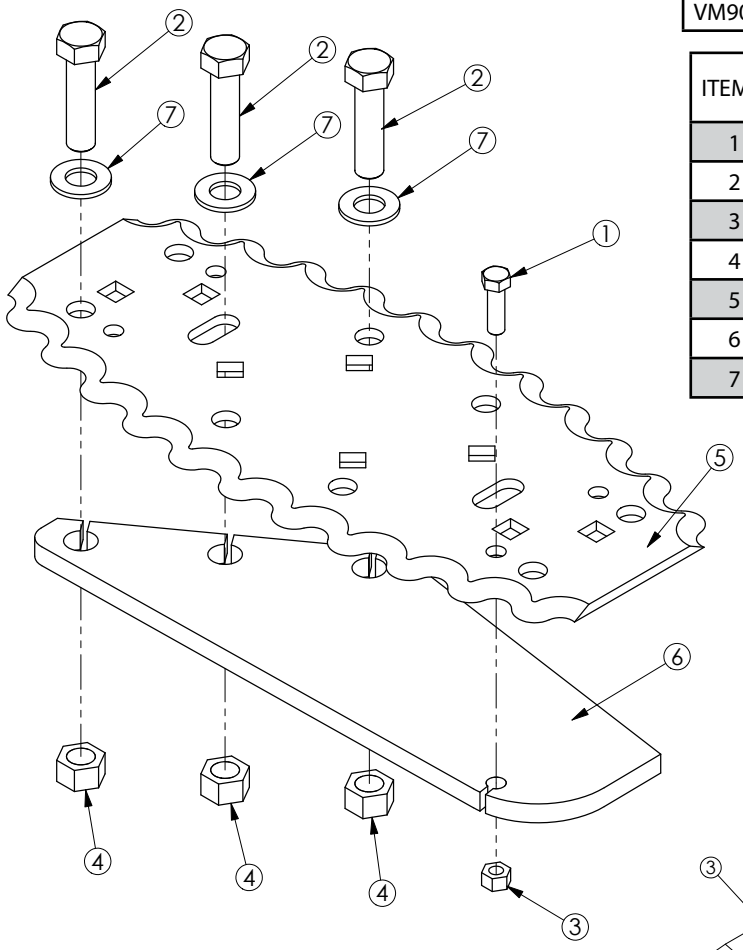

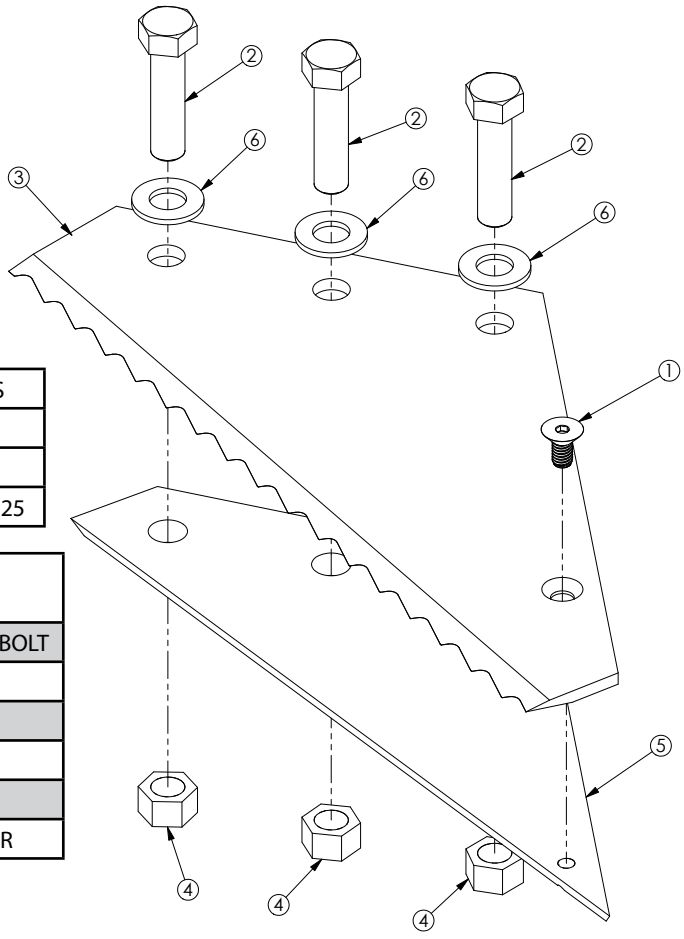

PART #	DESCRIPTION	APPLICABLE MODEL #S
VM900322-1	90"TRIANGLE KNIFE KIT	3640, 3675, 3680
VM900322-2	96"TRIANGLE KNIFE KIT	3650, 3670, 3690
VM900322-3	102"TRIANGLE KNIFE KIT	3645, 3655, 36100, 36125

ITEM #	-1 QTY	-2 QTY	-3 QTY	PART #	DESCRIPTION
1	5	7	9	BLT38X34SFHNC	3/8X3/4 FLAT HEAD BOLT
2	15	21	27	BLT58X212NC	5/8X2-1/2 BOLT
3	5	7	9	MON800541	TRIANGLE KNIFE
4	15	21	27	NUT58LOCKNC	5/8" LOCK NUT
5	5	7	9	VM100189	KNIFE SUPPORT
6	15	21	27	WSH58FLATG8	G8 5/8" FLAT WASHER

NOTE: KITS ARE IN PER AUGER QUANTITIES

RESTRICTOR BLADE

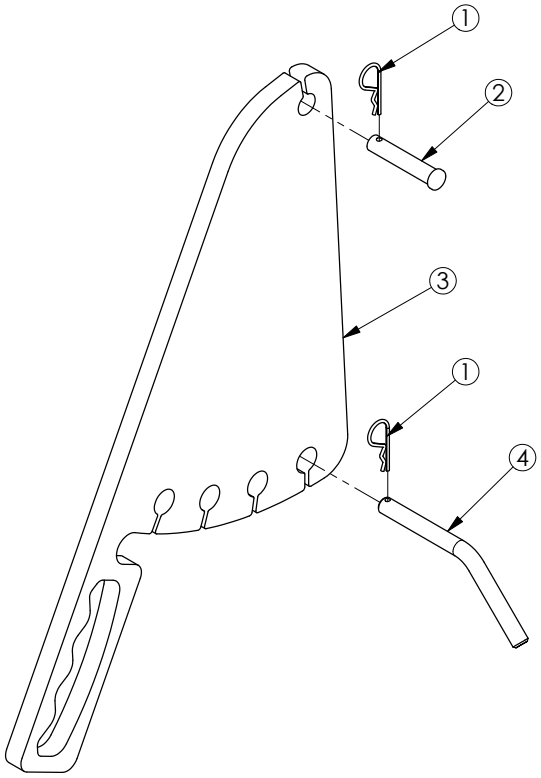

ITEM #	QTY.	PART #	DESCRIPTION
1	2	SPHPN332	3/16 PIN CLIP
2	1	SPPP12X212	PIVOT PIN
3	1	VM100640	RESTRICTOR BLADE
4	1	VM800055	RESTRICTOR BLADE PIN

VIEWING WINDOW

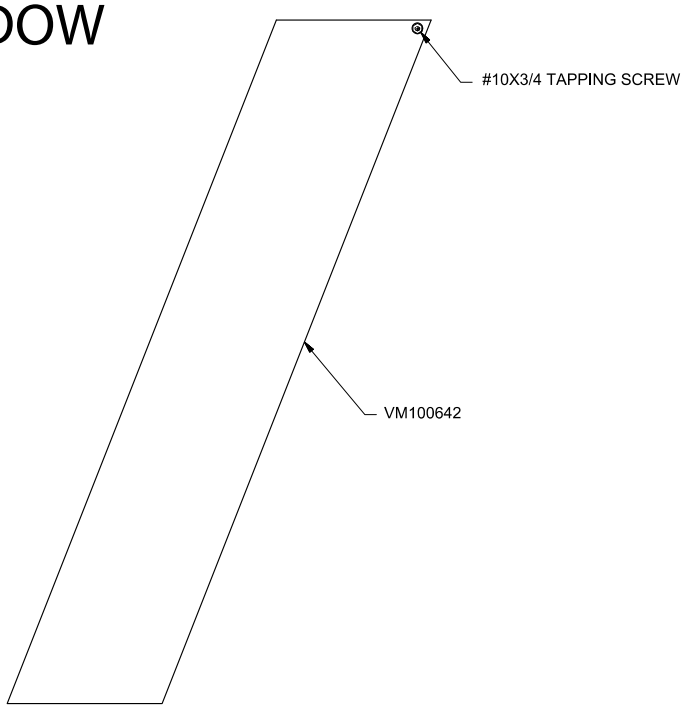

6’ FLAT DISCHARGE W/ 41, 48, 60 & 72” WING

MODEL	PART #	DESCRIPTION
6’41”	VM100700	41”WING CHAIN GUARD
6’48”	VM100942	48”WING CHAIN GUARD
6’60”	VM100701	60”WING CHAIN GUARD
6’72”	VM100702	72”WING CHAIN GUARD

WING DISCHARGE FINAL ASSEMBLY PART NUMBERS		
MODEL	PART #	DESCRIPTION
6’41”	VM800285	6’41”WING DISCHARGE
6’48”	VM800519	6’48”WING DISCHARGE
6’60”	VM800286	6’60”WING DISCHARGE
6’72”	VM800287	6’72”WING DISCHARGE

MODEL	PART #	DESCRIPTION
6’41”	VM100703	41”WING CHAIN GUARD BRACKET
6’48”	VM100943	48”WING CHAIN GUARD BRACKET
6’60”	VM100704	60”WING CHAIN GUARD BRACKET
6’72”	VM100705	72”WING CHAIN GUARD BRACKET

MODEL	PART #	DESCRIPTION
ALL	VM100706	REAR WING SHIELD

MODEL	PART #	DESCRIPTION
ALL	VM100707	RAR FLAT SHIELD

MODEL	PART #	DESCRIPTION
ALL	VM100215	CORNER SHIELD SUPPORT

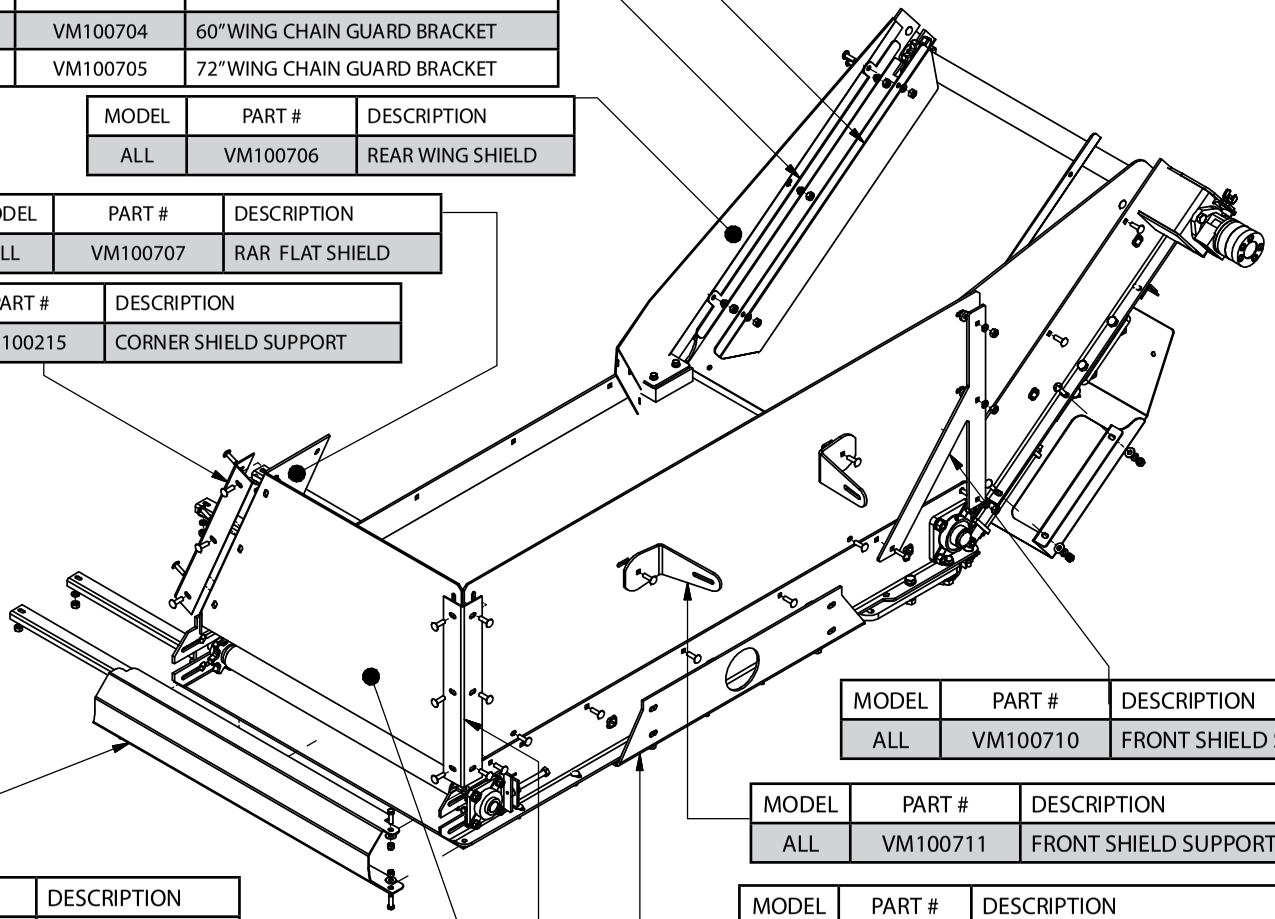

MODEL	PART #	DESCRIPTION
ALL	VM100710	FRONT SHIELD STIFFENER

MODEL	PART #	DESCRIPTION
ALL	VM100711	FRONT SHIELD SUPPORT

MODEL	PART #	DESCRIPTION
ALL	VM100182	FRONT DIS MOUNTING BRACKET

MODEL	PART #	DESCRIPTION
ALL	VM100215	CORNER SHIELD SUPPORT

MODEL	PART #	DESCRIPTION
ALL	VM100708	APRON CAP

MODEL	PART #	DESCRIPTION
ALL	VM100709	6’ FLAT DISCARGE END SHEILD

6' FLAT DISCHARGE W/ 41, 48, 60 & 72" WING

MODEL	PART #	DESCRIPTION
ALL	VM100712	6' FLAT FRONT SHIELD

MODEL	PART #	DESCRIPTION
ALL	VM100714	6' FLAT CHAIN COVER BRACKET

MODEL	PART #	DESCRIPTION
ALL	VM100713	FRONT SHIELD WASHER

MODEL	PART #	DESCRIPTION
ALL	VM100704	6' FLAT CHAIN COVER

MODEL	PART #	DESCRIPTION
6'41"	VM100700	41"WING CHAIN GUARD
6'48"	VM100942	48"WING CHAIN GUARD
6'60"	VM100741	60" FRONT WING CHAIN GUARD
6'72"	VM100742	72" FRONT WING CHAIN GUARD

MODEL	PART #	DESCRIPTION
6'41"	VM100703	41"WING CHAIN GUARD BRACKET
6'48"	VM100943	48"WING CHAIN GUARD BRACKET
6'60"	VM100704	60"WING CHAIN GUARD BRACKET
6'72"	VM100705	72"WING CHAIN GUARD BRACKET

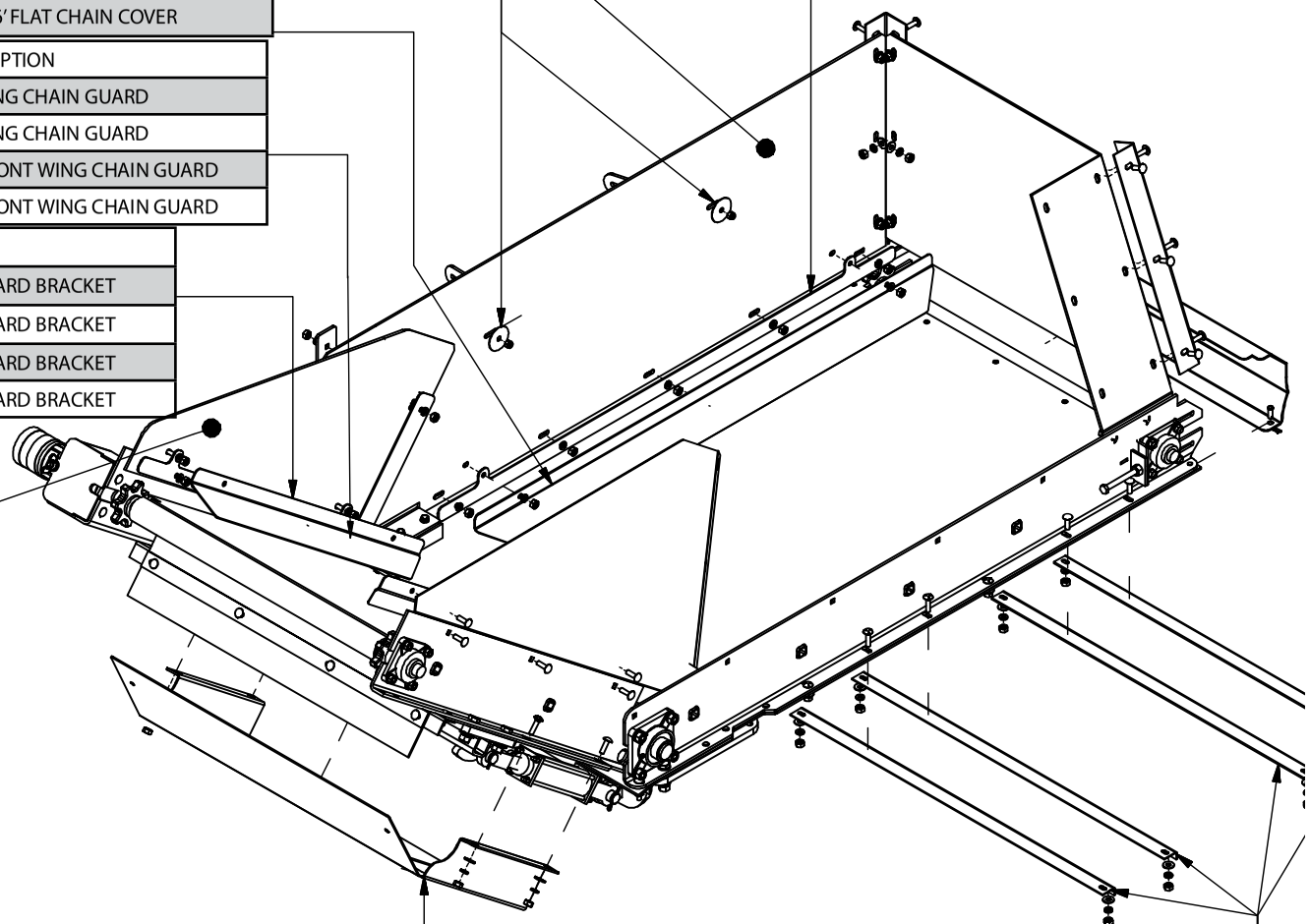

MODEL	PART #	DESCRIPTION
6'41"	VM100715	41" FRONT WING SHIELD
6'48"	VM100944	48" FRONT WING SHIELD
6'60"	VM100716	60" FRONT WING SHIELD
6'72"	VM100717	72" FRONT WING SHIELD

NOTE: AN ADDITIONAL, OPTIONAL SKID PLATE IS AVAILABLE THAT FITS OVER THE EXISTING VM100718 SKID PLATE .
P/N: VM700328

MODEL	PART #	DESCRIPTION
ALL	VM100718	DISCHARGE SKID PLATE

MODEL	PART #	DESCRIPTION
ALL	VM100197	UNDERSIDE SUPPORT ANGLE

6' FLAT DISCHARGE W/ 41, 48, 60 & 72" WING ASSEMBLY HARDWARE

DETAIL A

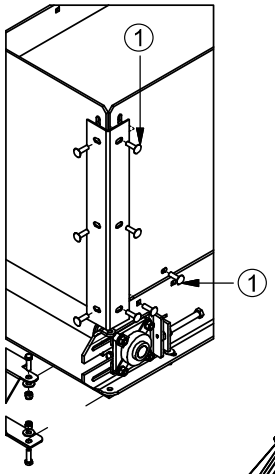

DETAIL B

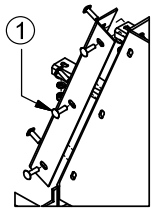

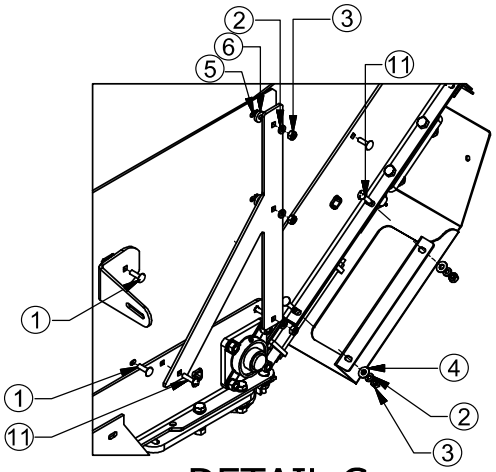

DETAIL C

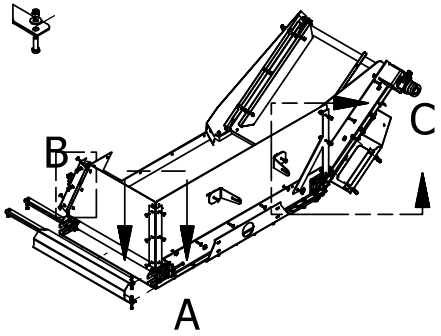

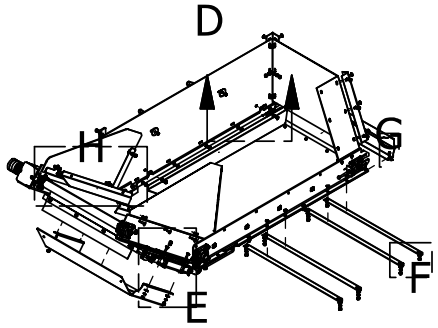

ITEM #	6'41" QTY	6'48" QTY	6'60" QTY	6'72" QTY	PART #	DESCRIPTION
1	27	17	25	17	BLT38X114CNC	3/8X1-1/4 CARRIAGE BOLT
2	39	35	49	43	WSH38LOCK	3/8" LOCK WASHER
3	39	35	49	43	NUT38NC	3/8" NUT
4	27	25	35	23	WSH38FLAT	3/8" FLAT WASHER
5	4	4	4	4	BLT38X114EL	3/8X1-1/4 ELEVATOR BOLT
6	2	2	2	2	VM100743	.38X1X.25 PLASTIC WASHER
7	4	6	4	4	NUT38LOCKNC	3/8" LOCK NUT
8	2	2	2	2	BLT38X114NC	3/8X1-1/4 BOLT
9	1	1	1	1	SPPP38X1	3/8X1 PICKER PIN
10	1	1	1	1	SPHPN116	1/16" HAIR PIN
11	10	4	4	10	BLT38X112CNC	3/8X1-1/2 CARRIAGE BOLT
12	0	4	16	14	BLT38X1CNC	3/8X1 CARRIAGE BOLT
13	0	2	2	0	BLT38X1NC	3/8X1 BOLT
14	2	2	2	2	VM100713	FRONT SHIELD WASHER

NOTE: SOME HARDWARE USED ON 6'60" & 6' 72" DISCHARGE ASSEMBLIES MAY NOT MATCH WHAT IS SHOWN IN DRAWING.

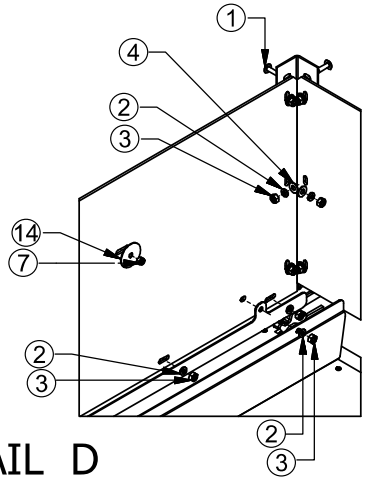

DETAIL D

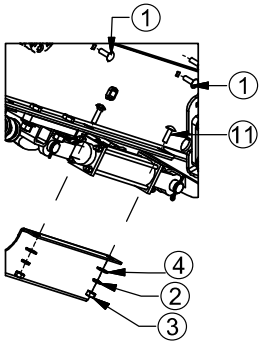

DETAIL E

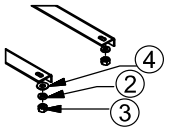

DETAIL F

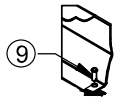

DETAIL G

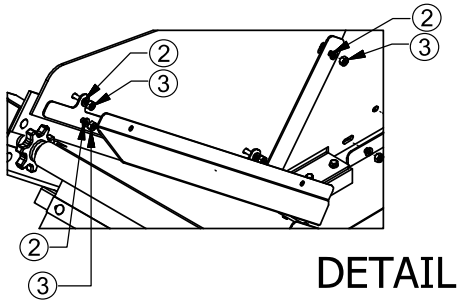

DETAIL H

6' FLAT DISCHARGE W/ 41, 48, 60 & 72" WING BASE ASSEMBLIES

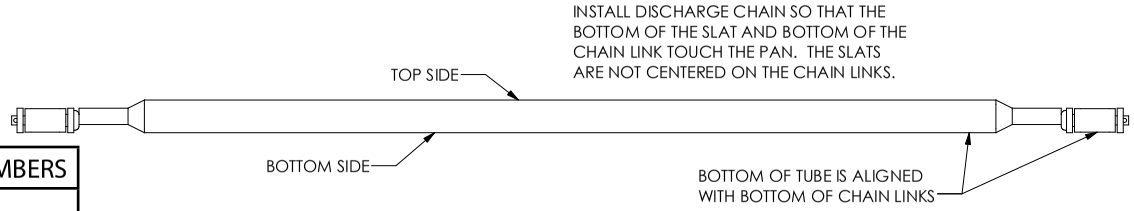

WING DISCHARGE BASE ASSEMBLY PART NUMBERS		
MODEL	PART #	DESCRIPTION
6'41"	VM900311	6'41" WING BASE ASSEMBLY
6'48"	VM900390	6'48" WING BASE ASSEMBLY
6'60"	VM900312	6'60" WING BASE ASSEMBLY
6'72"	VM900313	6'72" WING BASE ASSEMBLY

WING DISCHARGE BASE ASSEMBLIES		
MODEL	PART #	DESCRIPTION
41"	VM900288	41" WING BASE ASSEMBLY
48"	VM900389	48" WING BASE ASSEMBLY
60"	VM900308	60" WING BASE ASSEMBLY
72"	VM900309	72" WING BASE ASSEMBLY

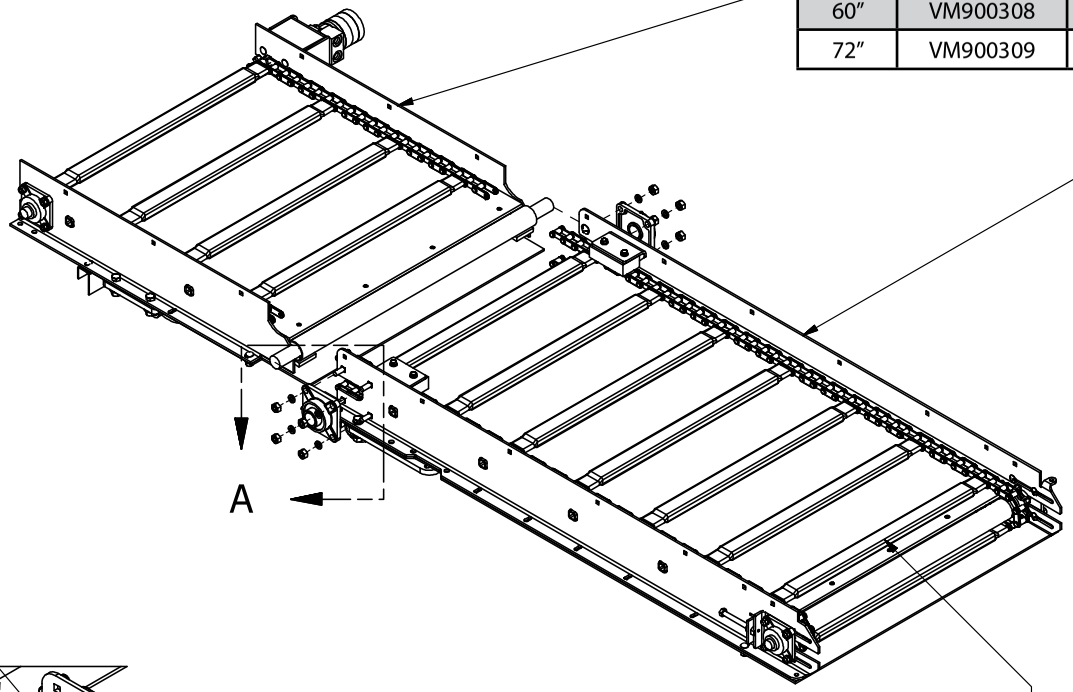

6' FLAT BED ASSEMBLY		
MODEL	PART #	DESCRIPTION
6' FLAT	VM900310	6' FLAT BASE ASSEMBLY

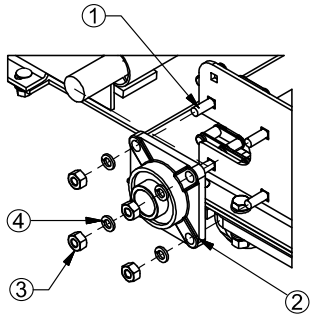

DETAIL A

MODEL	ITEM #	QTY	PART #	DESCRIPTION
ALL	1	8	BLT12X112CNC	1/2X1-1/2 CARRIAGE BOLT
	2	2	BRGUCF20824	1-1/2 FLANGE BEARING
	3	8	NUT12NC	1/2" NUT
	4	8	WSH12LOCK	1/2" LOCK WASHER

WING DISCHARGE APRON CHAIN		
MODEL	PART #	DESCRIPTION
6'41"	VM700071	6'41" WING APRON CHAIN
6'48"	VM700368	6'48" WING APRON CHAIN
6'60"	VM700238	6'60" WING APRON CHAIN
6'72"	VM700075	6'72" WING APRON CHAIN

VM900310 LH 6' FLAT DISCHARGE

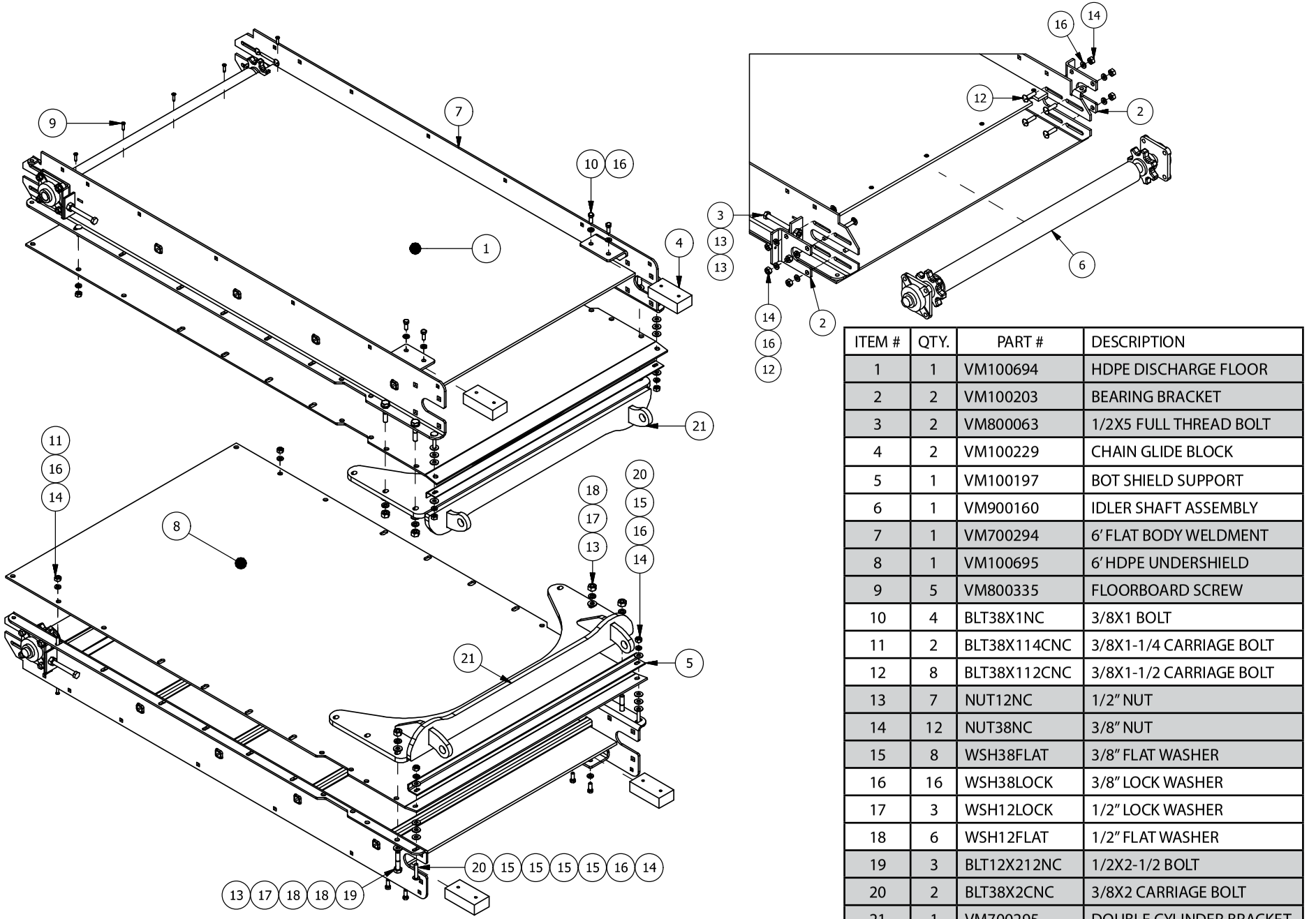

ITEM #	QTY.	PART #	DESCRIPTION
1	1	VM100694	HDPE DISCHARGE FLOOR
2	2	VM100203	BEARING BRACKET
3	2	VM800063	1/2X5 FULL THREAD BOLT
4	2	VM100229	CHAIN GLIDE BLOCK
5	1	VM100197	BOT SHIELD SUPPORT
6	1	VM900160	IDLER SHAFT ASSEMBLY
7	1	VM700294	6' FLAT BODY WELDMENT
8	1	VM100695	6' HDPE UNDERSHIELD
9	5	VM800335	FLOORBOARD SCREW
10	4	BLT38X1NC	3/8X1 BOLT
11	2	BLT38X114CNC	3/8X1-1/4 CARRIAGE BOLT
12	8	BLT38X112CNC	3/8X1-1/2 CARRIAGE BOLT
13	7	NUT12NC	1/2" NUT
14	12	NUT38NC	3/8" NUT
15	8	WSH38FLAT	3/8" FLAT WASHER
16	16	WSH38LOCK	3/8" LOCK WASHER
17	3	WSH12LOCK	1/2" LOCK WASHER
18	6	WSH12FLAT	1/2" FLAT WASHER
19	3	BLT12X212NC	1/2X2-1/2 BOLT
20	2	BLT38X2CNC	3/8X2 CARRIAGE BOLT
21	1	VM700295	DOUBLE CYLINDER BRACKET

DISCHARGE WING ASSEMBLIES

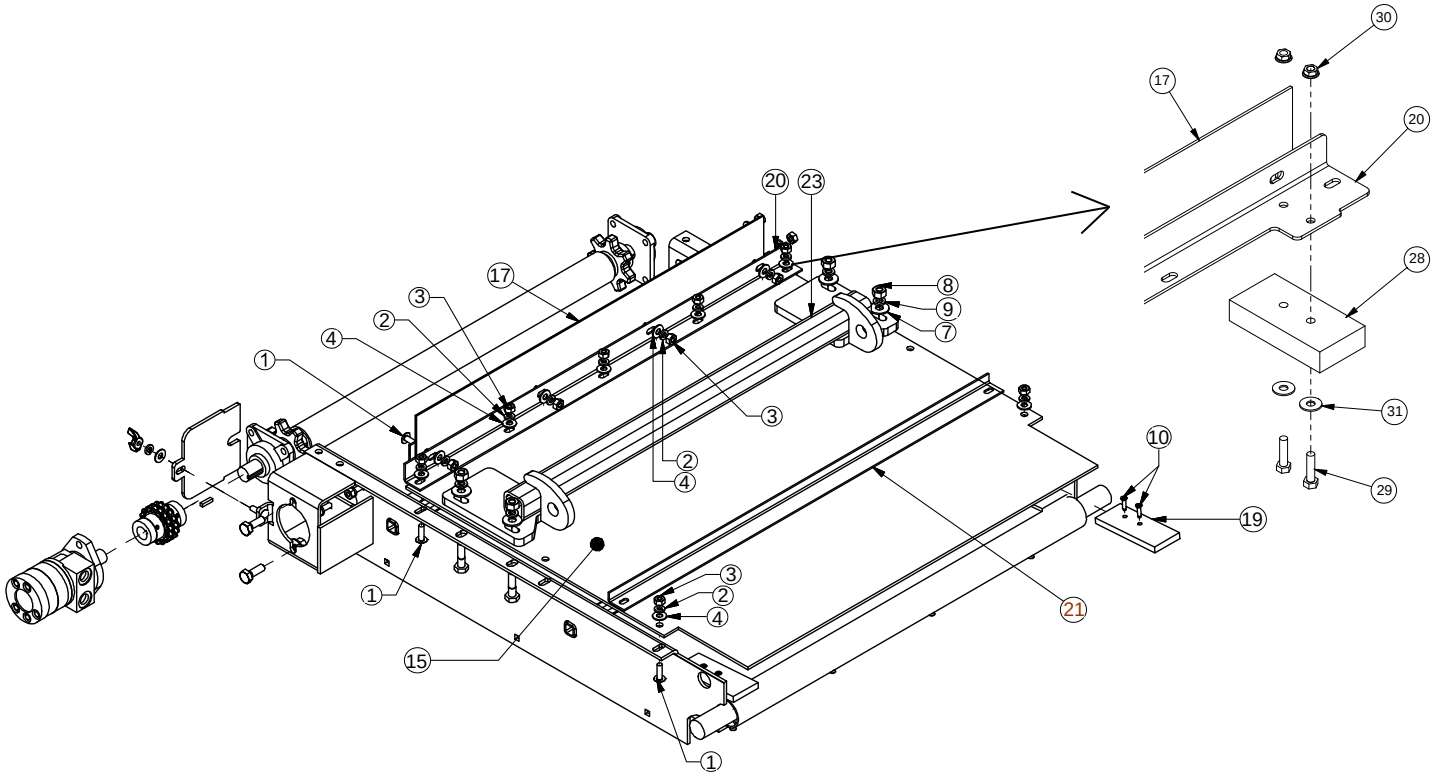

THE CYLINDER BRACKET FOR THE 60" & 72" DISCHARGE WINGS DIFFER FROM THE VERSION SHOWN IN THE ABOVE DRAWING. SEE THE IMAGE BELOW OF THE CYLINDER BRACKET USED ON 60" & 72" DISCHARGE WINGS.

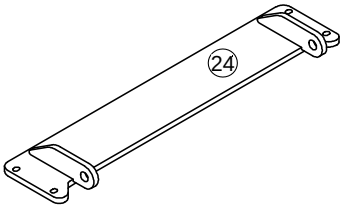

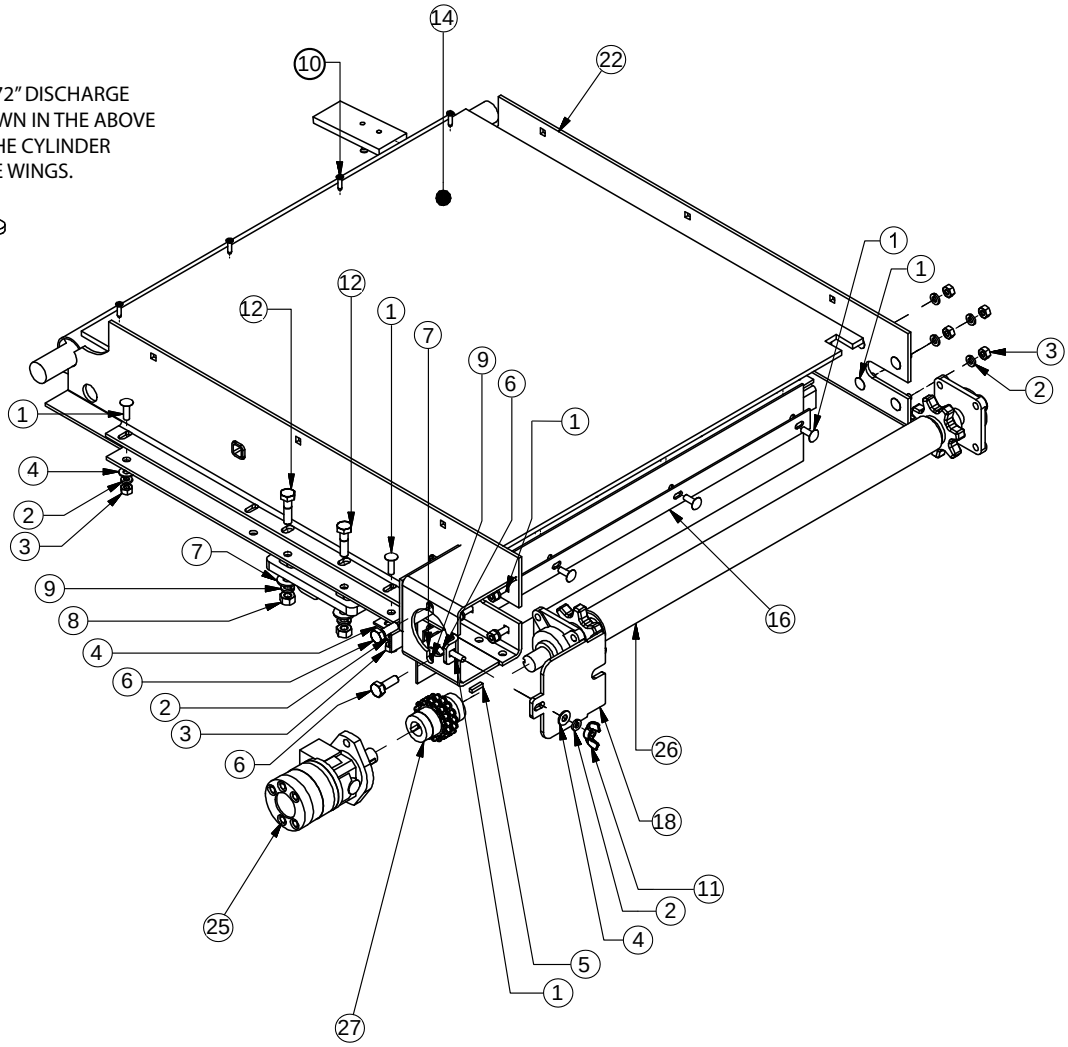

DISCHARGE WING ASSEMBLIES

PART #	DESCRIPTION
VM900288	41" WING ASSEMBLY
VM900389	48" WING ASSEMBLY
VM900308	60" WING ASSEMBLY
VM900309	72" WING ASSEMBLY

ITEM #	VM900288 41" WING QTY.	VM900389 48" WING QTY.	VM900308 60" WING QTY.	VM900309 72" WING QTY.	PART #	DESCRIPTION
1	21	21	21	21	BLT38X114CNC	3/8X1-1/4 CARRIAGE BOLT
2	21	21	21	21	WSH38LOCK	3/8" LOCK WASHER
3	21	21	21	21	NUT38NC	3/8" NUT
4	14	14	14	14	WSH38FLAT	3/8" FLAT WASHER
5	1.5	1.5	1.5	1.5	KEY14X14	1/4 X 1/4 KEY STOCK
6	2	2	2	2	BLT12X112NC	1/2X1-1/2 BOLT
7	6	6	6	6	WSH12FLAT	1/2" FLAT WASHER
8	6	6	6	6	NUT12NC	1/2" NUT
9	6	6	6	6	WSH12LOCK	1/2" LOCK WASHER
10	8	8	4	4	VM800335	1/2X1 TORX HEAD BOLT
11	1	1	1	1	NUT38WING	3/8" WING NUT
12	4	4	4	4	BLT12X2NC	1/2X2 BOLT
13	0	0	4	4	VM800336	5/16X1-1/2 TORX HEAD BOLT
14	1	0	0	0	VM100688	41" DISHCARGE FLOOR
	0	1	0	0	VM100962	48" DISCHARGE FLOOR
	0	0	1	0	VM100689	60" DISCHARGE FLOOR
	0	0	0	1	VM100690	72" DISCHARGE FLOOR
15	1	0	0	0	VM100691	41" UNDERSHIELD
	0	1	0	0	VM100956	48" UNDERSHIELD
	0	0	1	0	VM100657	60" UNDERSHIELD
	0	0	0	1	VM100693	72" UNDERSHIELD
16	1	1	1	1	VM100199	RUBBER FLAP RETAINER
17	1	1	1	1	VM100200	RUBBER FLAP
18	1	1	1	1	VM100202	MOTOR COVER PLATE
19	2	2	2	2	VM100207	WEAR BAR
20	1	1	1	1	VM100913	RUBBER FLAP MOUNT
21	0	0	1	1	VM100209	BOTTOM SHIELD SUPPORT
22	1	0	0	0	VM700264	41" WING FRAME
	0	1	0	0	VM700370	48" WING FRAME
	0	0	1	0	VM700287	60" WING FRAME
	0	0	0	1	VM700288	72" WING FRAME
23	1	1	0	0	VM700289	41" WING CYLINDER BRACKET
24	0	0	1	1	VM700290	60" & 72" WING CYLINDER BRACKET
25	1	1	1	1	HYD1011037	APRON MOTOR
26	1	1	1	1	VM900159	DRIVE SHAFT ASSEMBLY
27	1	1	1	1	VM900161	APRON DRIVE CHAIN COUPLER
28	2	2	2	2	VM100912	2-1/2X5 PLASTIC CHAIN GUIDE
29	4	4	4	4	BLT516X114NC	5/16X1-1/4 BOLT
30	4	4	4	4	NUT516WHIZ	5/16" WHIZ NUT
31	4	4	4	4	WSH516FLAT	5/16" FLAT WASHER

6' DISCHARGE W/ 41", 48", 60" AND 72" WING HYDRAULIC ASSEMBLY

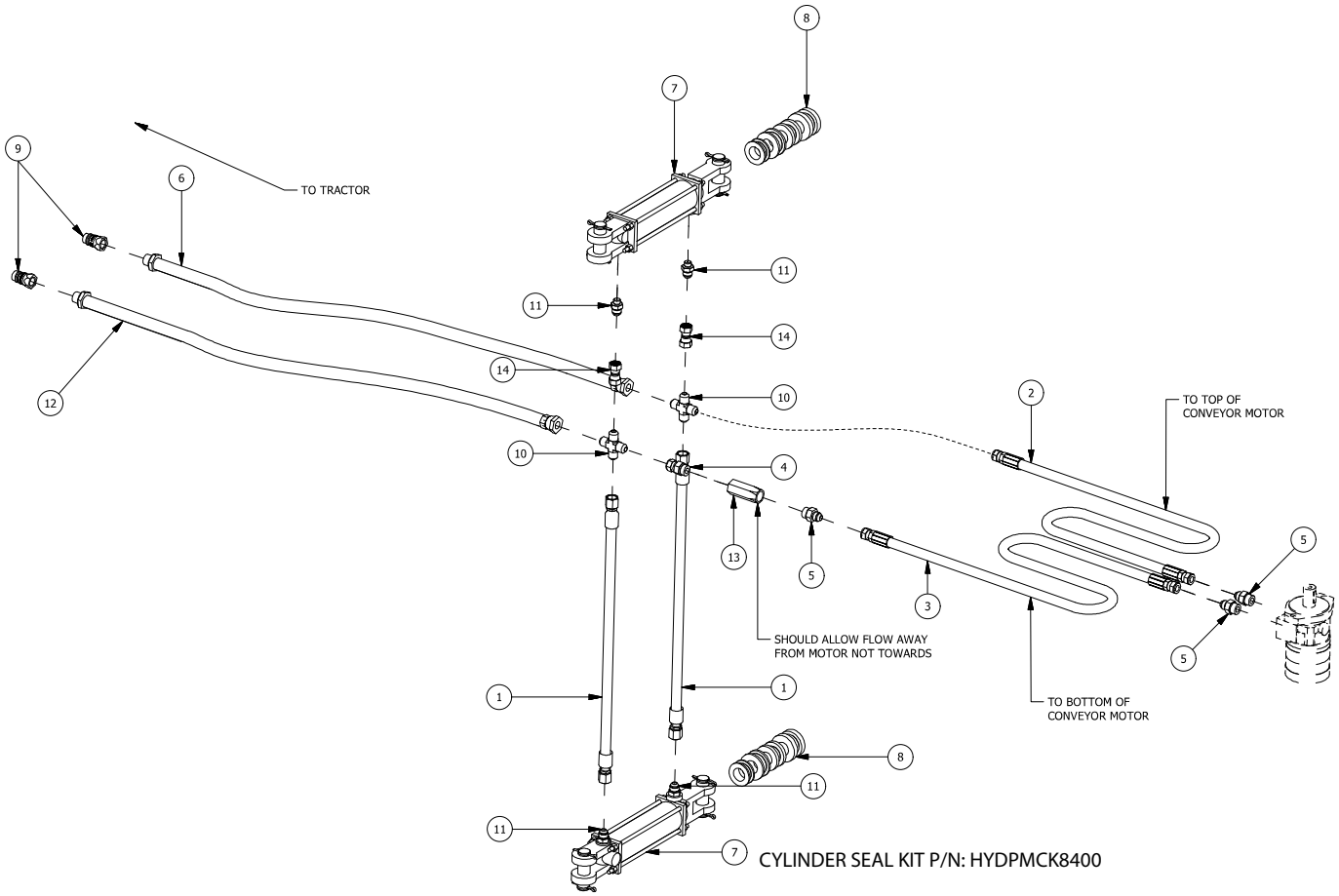

ITEM #	VM900317 41" WING QTY	VM900xxx 48" WING QTY	VM900318 60" WING QTY	VM900327 72" WING QTY.	PART #	DESCRIPTION
1	2	2	2	2	PAC185038	HYDRAULIC HOSE
2	-		-	1	MON700318	HYDRAULIC HOSE
	-	1	-	-	STI570012	HYDRAULIC HOSE
	-	-	1	-	PAC185056	HYDRAULIC HOSE
	1	-	-	-	PAC185124	HYDRAULIC HOSE
3	-	-	1	-	MON700318	HYDRAULIC HOSE
	1	-	-	-	MON700408	HYDRAULIC HOSE
	-	1	-	-	MON700351	HYDRAULIC HOSE
	-	-	-	1	PAC185098	HYDRAULIC HOSE
4	1	1	1	1	HYD6402-10-8	ADAPTER
5	3	3	3	3	HYD6400-8-10	ADAPTER
6	1	1	1	1	MON700566	HYDRAULIC HOSE
7	2	2	2	2	HYDPMC8406	6" CYLINDER
8	2	2	2	2	SPWH9697	CYLINDER STOP KIT
9	2	2	2	2	HYDS7115	HOSE TIP
10	2	2	2	2	HYD2650-8	CROSS ADAPTER
11	4	4	4	4	HYD6400-8-8R	.06 RESTRICTOR
12	1	1	1	1	SAC74196	HYDRAULIC HOSE

NOTES

NOTES

8' & 9' FLAT DISCHARGE ASSEMBLY

PART #	DESCRIPTION
VM800288	8' FLAT DISCHARGE ASSEMBLY
VM800289	9' FLAT DISCHARGE ASSEMBLY

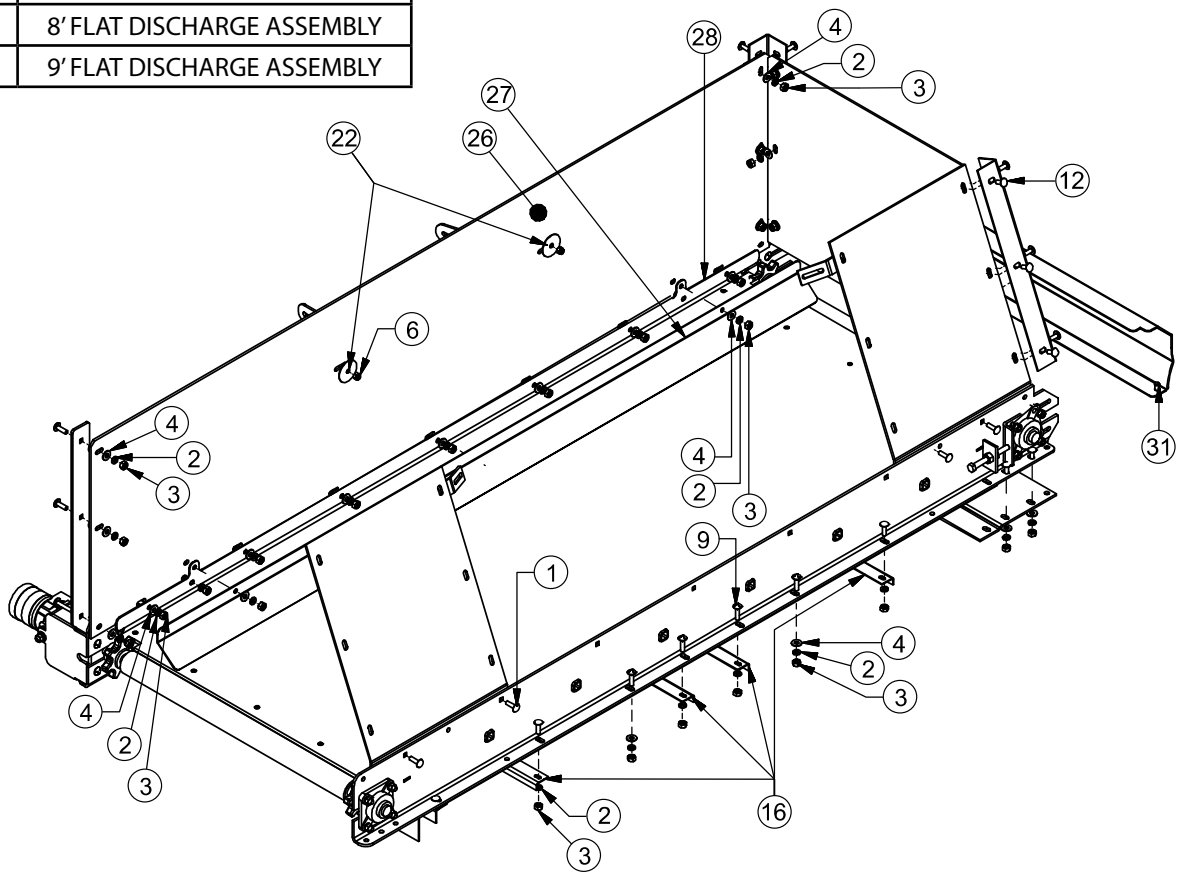

ITEM #	8' QTY.	9' QTY.	PART #	DESCRIPTION
1	19	20	BLT38X114CNC	3/8X1-1/4 CARRIAGE BOLT
2	55	42	WSH38LOCK	3/8" LOCK WASHER
3	59	46	NUT38NC	3/8" NUT
4	48	40	WSH38FLAT	3/8" FLAT WASHER
5	5	4	VM100743	3/8X1 PLASTIC WASHER
6	2	4	NUT38LOCKNC	3/8" LOCK NUT
7	1	1	SPPP38X1	3/8X1 PICKER PIN
8	1	1	SPHPN18	1/8" HAIR PIN CLIP
9	16	11	BLT38X112CNC	3/8X1-1/2 CARRIAGE BOLT
10	4	0	BLT38X2CNC	3/8X2 CARRIAGE BOLT
11	2	0	BLT38X1NC	3/8X1 BOLT
12	20	17	BLT38X1CNC	3/8X1 CARRIAGE BOLT
13	0	2	BLT38X114NC	3/8X1-1/4 BOLT
14	1	1	VM100182	FRONT DISCHARGE BRACKET
15	2	2	VM100192	SHIELD BRACE
16	4	4	VM100197	BOTTOM SHIELD SUPPORT
17	1	1	VM100215	CORNER SHIELD SUPPORT
18	1	1	VM100708	APRON CAP
19	1	1	VM100709	DISHCARGE END SHIELD
20	1	1	VM100710	FRONT SHIELD STIFFENER
21	2	2	VM100711	SHIELD SUPPORT BRACKET
22	2	2	VM100713	SHIELD WASHER

8' & 9' FLAT DISCHARGE ASSEMBLY

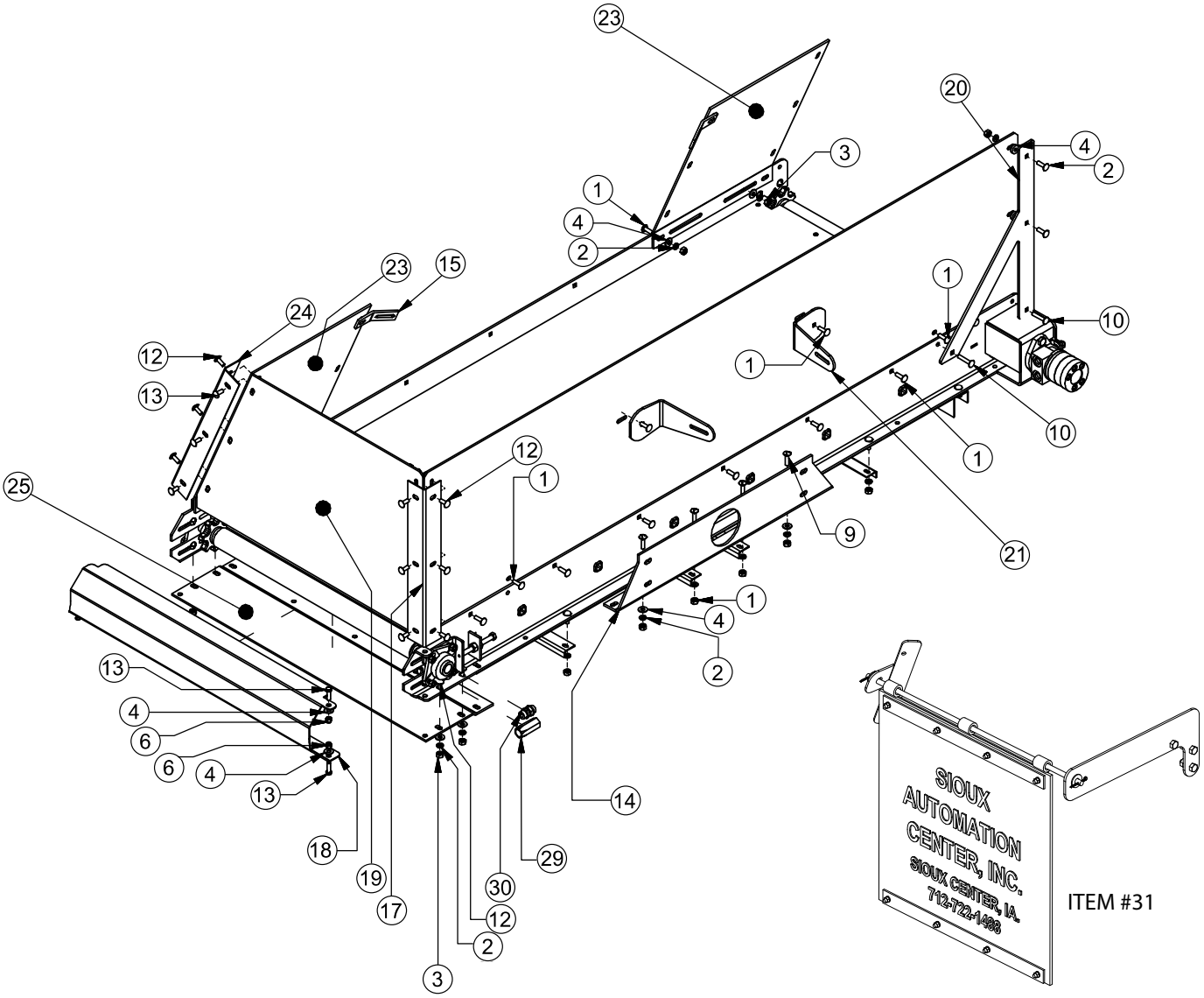

ITEM #31

ITEM #	8' QTY.	9' QTY.	PART #	DESCRIPTION
23	2	0	VM100719	8' DRUM SIDE SHIELD
	0	2	VM100720	9' DRUM SIDE SHIELD
24	1	1	VM100721	DRUN SIDE CORNER SUPPORT
25	1	1	VM100722	CAP END UNDERSHIELD
26	1	0	VM100723	8' FRONT SHIELD
	0	1	VM100724	9' FRONT SHIELD
27	1	0	VM100725	8' APRON CHAIN GUARD
	0	1	VM100726	9' APRON CHAIN GUARD
28	1	0	VM100727	8' CHAIN GUARD BRACKET
	0	1	VM100728	9' CHAIN GUARD BRACKET
29	1	1	VM800069	CHECK VALVE
30	1	1	HYD6400-8-10	ADAPTER FITTING
31	1	1	VM900260	FLAT DISCHARGE DEFLECTOR KIT
32	1	0	VM900314	8' FLAT DISCHARGE BASE ASSY
	0	1	VM900315	9' FLAT DISCHARGE BASE ASSY

8' & 9' FLAT DISCHARGE BASE ASSEMBLY

PART #	DESCRIPTION
VM900314	8' FLAT DISCHARGE BASE ASSEMBLY
VM900315	9' FLAT DISCHARGE BASE ASSEMBLY

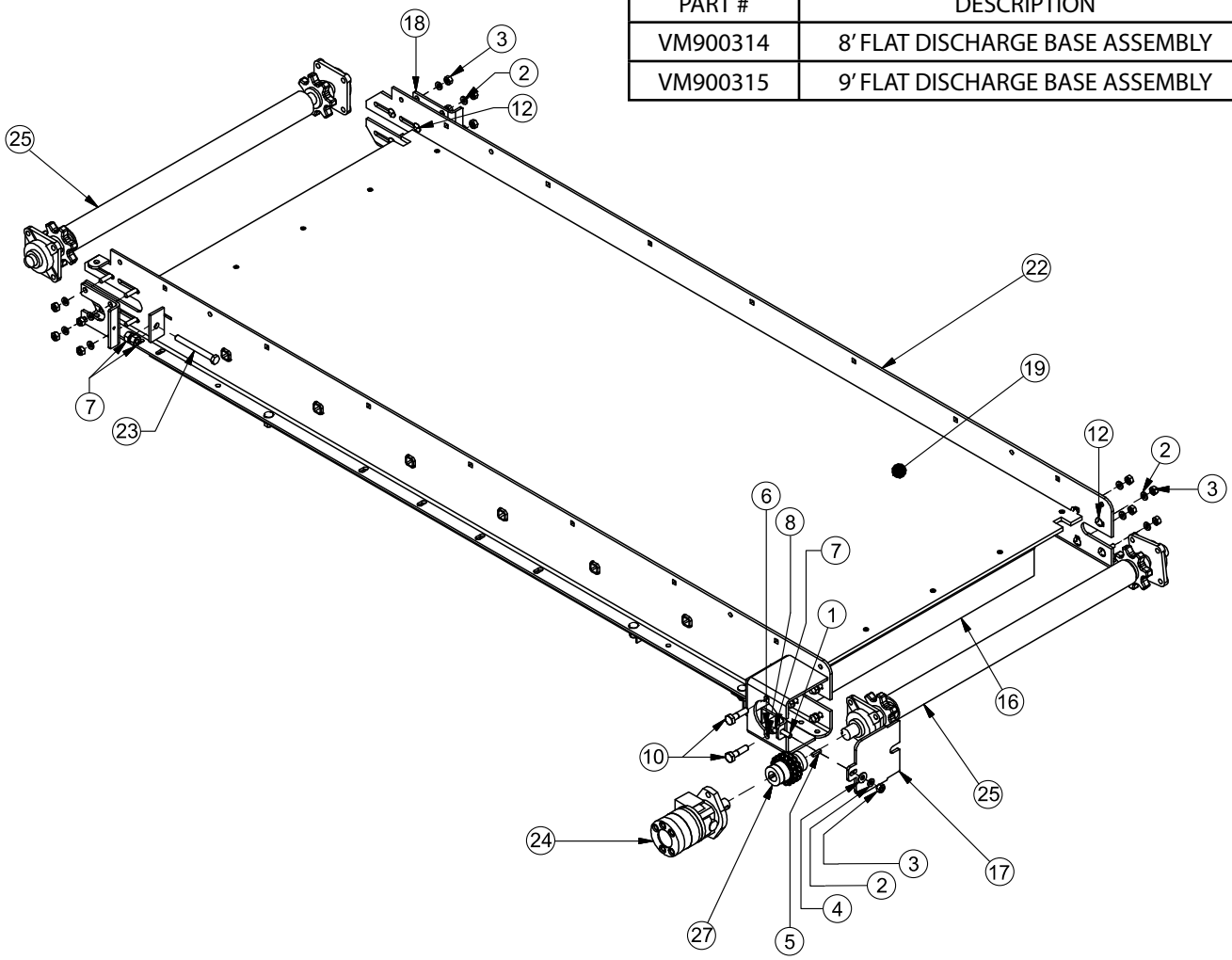

ITEM #	8' QTY.	9' QTY.	PART #	DESCRIPTION
1	7	9	BLT38X114CNC	3/8X1-1/4 CARRIAGE BOLT
2	30	32	WSH38LOCK	3/8" LOCK WASHER
3	30	32	NUT38NC	3/8" NUT
4	5	5	WSH38FLAT	3/8" FLAT WASHER
5	1	1	MON800026	1/4X1 KEY
6	2	2	WSH12FLAT	1/2" FLAT WASHER
7	6	6	NUT12NC	1/2" NUT
8	2	2	WSH12LOCK	1/2" LOCK WASHER
9	10	10	VM800335	1/2X1 TORX HEAD BOLT
10	2	2	BLT12X2NC	1/2X2 BOLT
11	7	7	BLT38X1CNC	3/8X1 CARRIAGE BOLT
12	16	16	BLT38X112CNC	3/8X1-1/2 CARRIAGE BOLT
13	1	2	VM100197	BOTTOM SHIELD SUPPORT
14	1	1	VM100198	RUBBER FLAP BRACKET
15	1	1	VM100199	RUBBER FLAP RETAINER
16	1	1	VM100200	RUBBER FLAP

8' & 9' FLAT DISCHARGE BASE ASSEMBLY

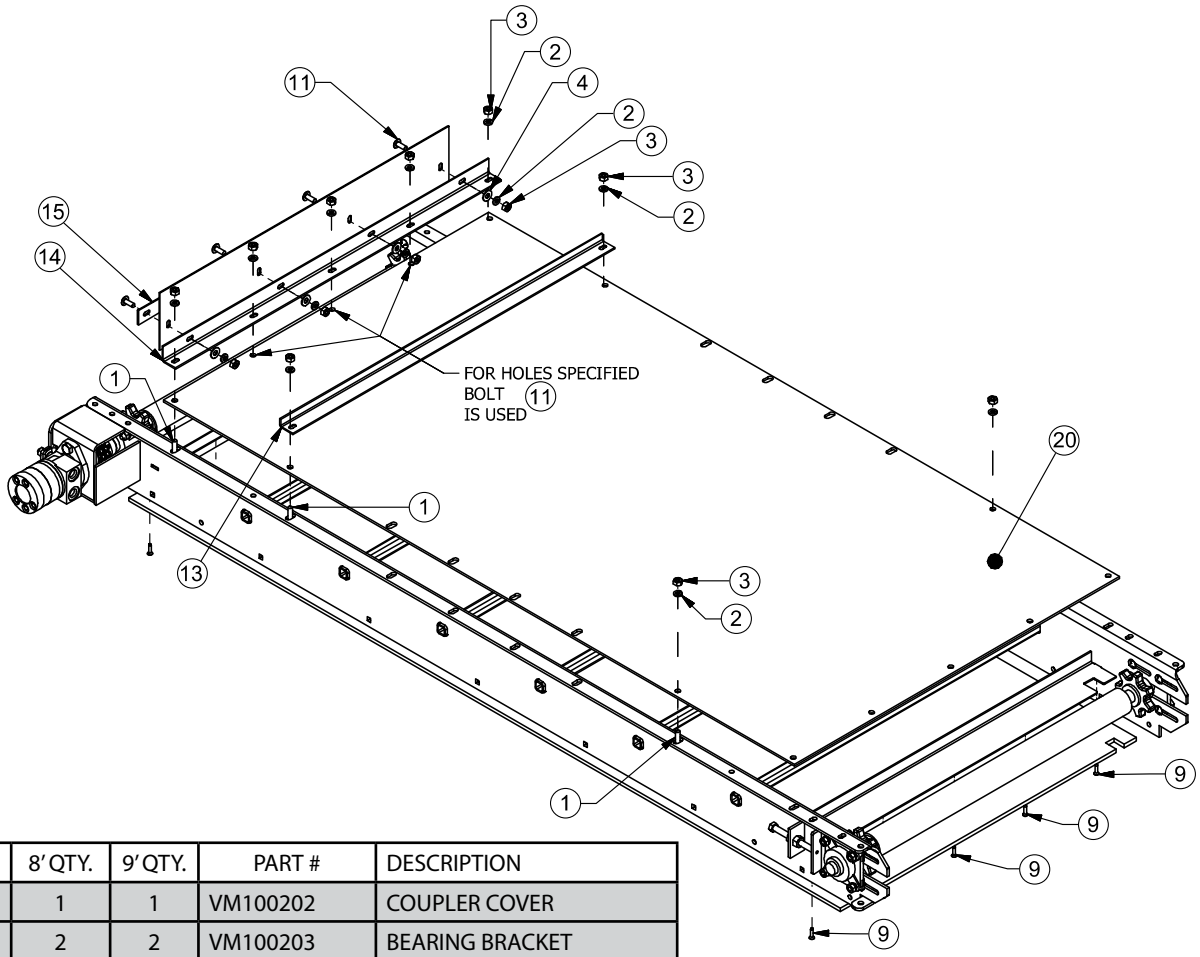

ITEM #	8' QTY.	9' QTY.	PART #	DESCRIPTION
17	1	1	VM100202	COUPLER COVER
18	2	2	VM100203	BEARING BRACKET
19	1	0	VM100696	8' DISCHARGE FLOOR
	0	1	VM100697	9' DISCHARGE FLOOR
20	1	0	VM100698	8' BOTTOM SHIELD
	0	1	VM100699	9' BOTTOM SHIELD
21	1	0	VM700073	8' APRON CHAIN
	0	1	VM700071	9' APRON CHAIN
22	1	0	VM700297	8' FLAT DISCHARGE FRAME
	0	1	VM700298	9' FLAT DISHCARGE FRAME
23	2	2	VM800063	1/2X5 FULL THREAD BOLT
24	1	1	HYD1011037	DISCHARGE MOTOR
25	1	1	VM900159	DRIVE SHAFT ASSEMBLY
26	1	1	VM900160	IDLER SHAFT ASSEMBLY
27	1	1	VM900161	DRIVE CHAIN COUPLER
28	1	1	VM900158	DUAL FLAT HYDRAULIC KIT

VM900158 DUAL FLAT DISHCARGE HYDRAULIC KIT			
ITEM #	QTY.	PART #	DESCRIPTION
1	2	HYDS7115	COUPLER TIP
2	2	HYD6400-8-10	ADAPTER
3	2	MON700566	HYDRAULIC HOSE

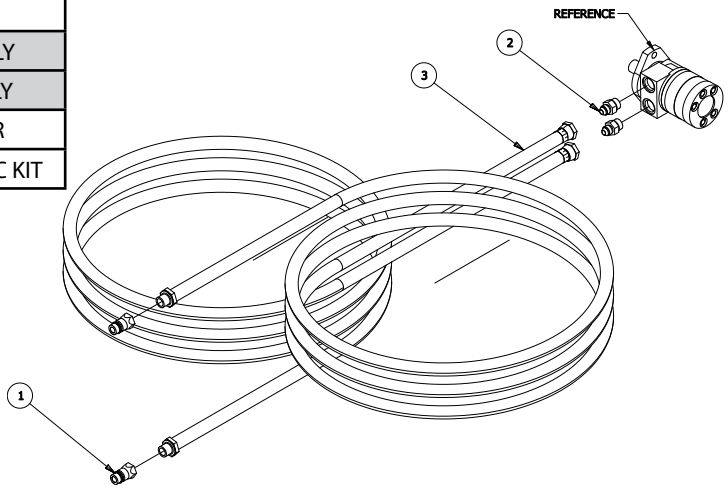

VM900159 DISCHARGE DRIVE SHAFT ASSEMBLY

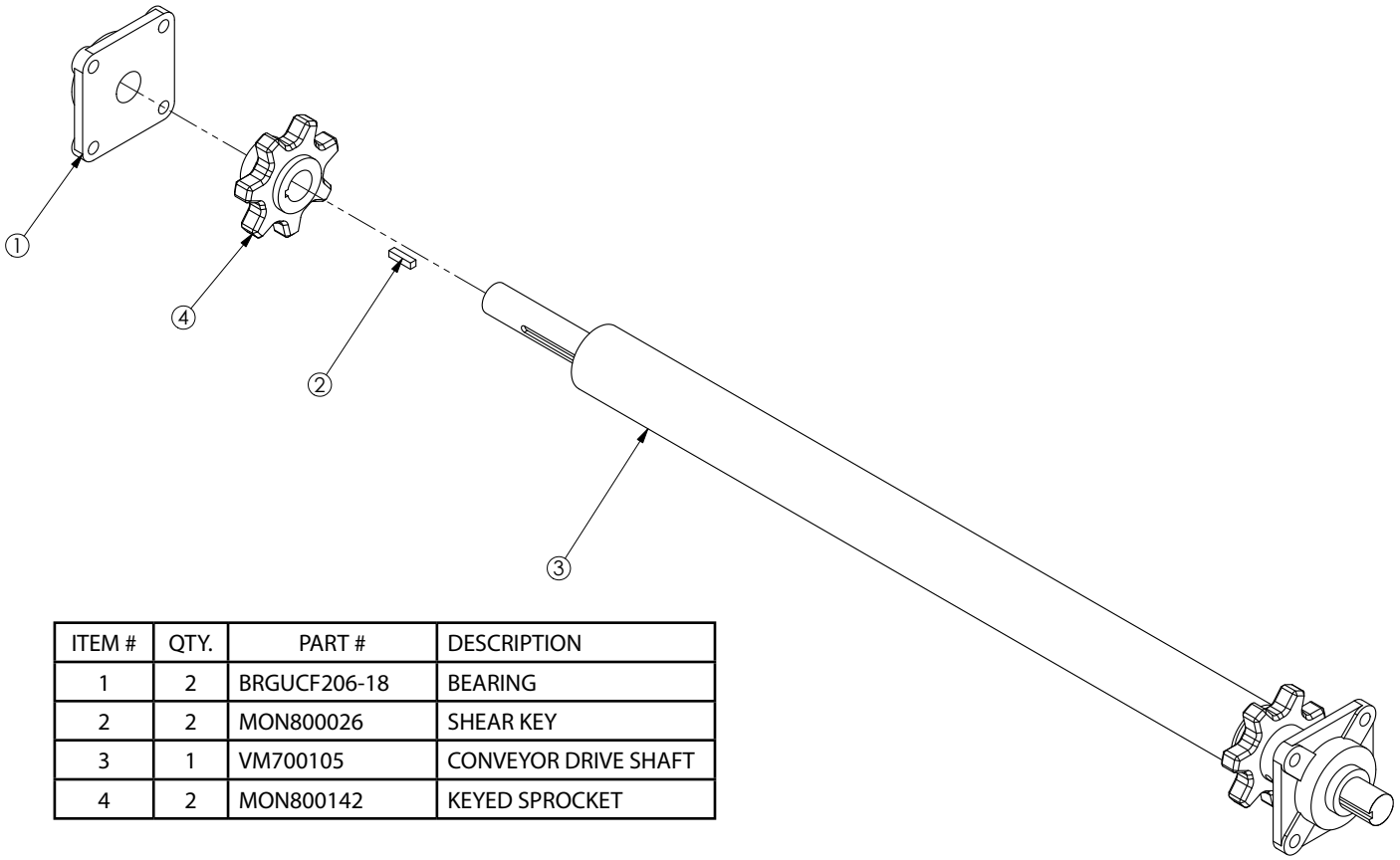

ITEM #	QTY.	PART #	DESCRIPTION
1	2	BRGUCF206-18	BEARING
2	2	MON800026	SHEAR KEY
3	1	VM700105	CONVEYOR DRIVE SHAFT
4	2	MON800142	KEYED SPROCKET

VM900160 DISCHARGE IDLER SHAFT ASSEMBLY

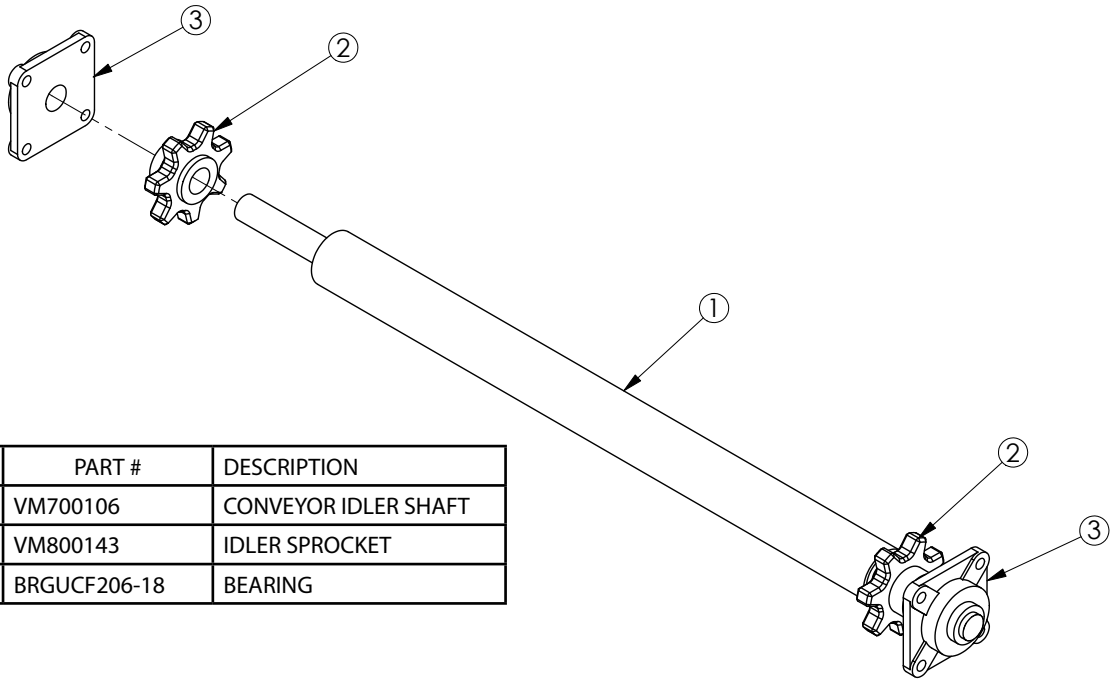

ITEM #	QTY.	PART #	DESCRIPTION
1	1	VM700106	CONVEYOR IDLER SHAFT
2	2	VM800143	IDLER SPROCKET
3	2	BRGUCF206-18	BEARING

OPTIONAL DISCHARGE ACCESSORIES

VM700328 41" DISCHARGE WING SKID PLATE WELDMENT

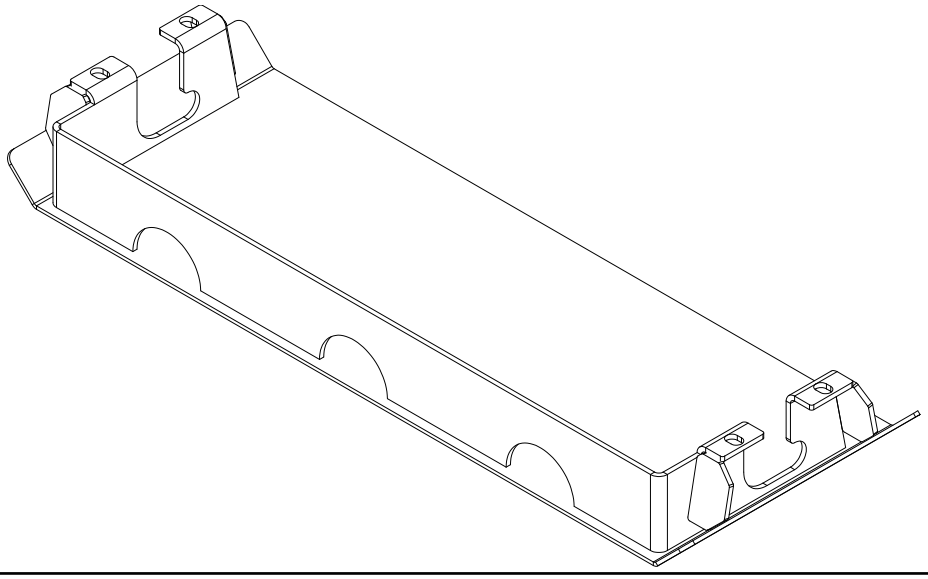

VM800032 MAGNETIC SLIDE TRAY KIT

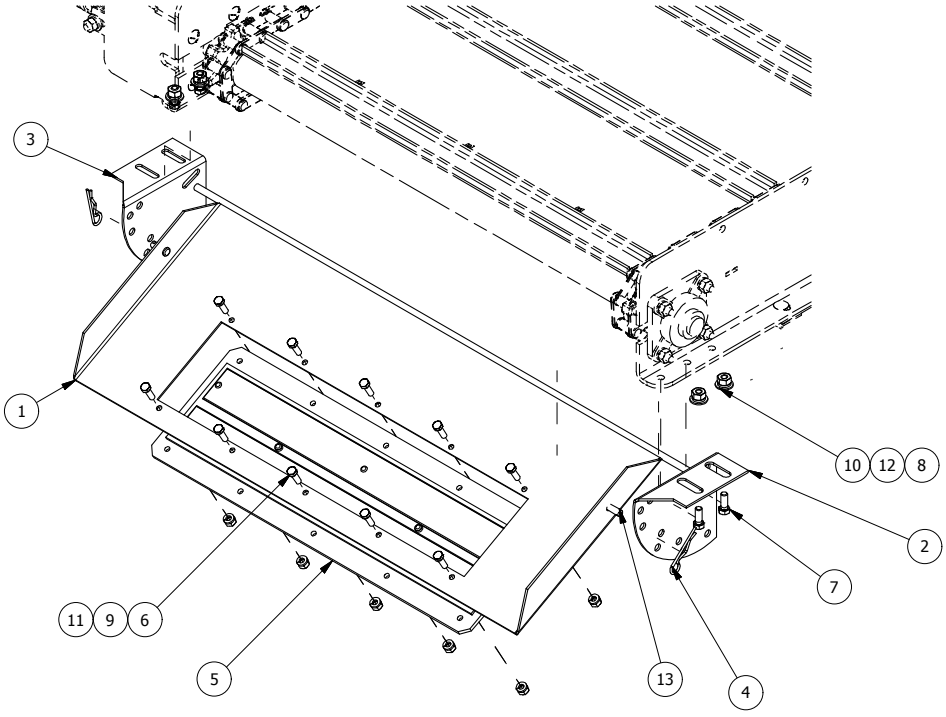

ITEM #	QTY.	PART #	DESCRIPTION
1	1	VM700100	CHUTE WELDMENT
2	1	VM100251	LH CHUTE MOUNT
3	1	VM100252	RH CHUTE MOUNT
4	2	SPHPN18	1/8" HAIR PIN
5	1	SPMAGNET2400	MAGNETIC PLATE
6	10	BLT516X1NC	5/16X1 BOLT
7	4	BLT38X1NC	3/8X1 BOLT

ITEM #	QTY.	PART #	DESCRIPTION
8	4	NUT38NC	3/8" NUT
9	10	NUT516NC	5/16" NUT
10	4	WSH38FLAT	3/8" FLAT WASHER
11	10	WSH516LOCK	5/16" LOCK WASHER
12	4	WSH38LOCK	3/8" LOCK WASHER
13	2	SPPP38X1	3/8X1 PIN

OPTIONAL DISCHARGE ACCESSORIES

VM900195 DEFLECTOR KIT WITH MAGNET OPTION

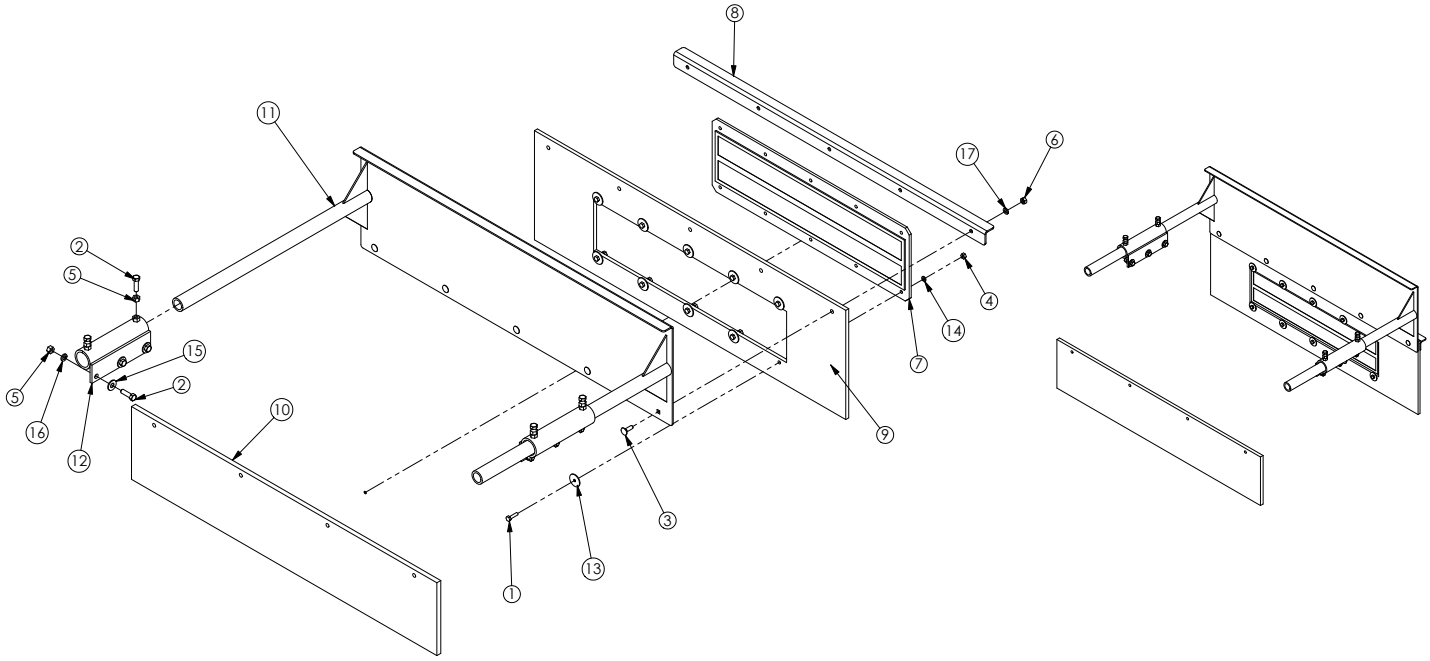

ITEM #	QTY.	PART #	DESCRIPTION
1	10	BLT14X1NC	1/4X1 BOLT
2	10	BLT38X114NC	3/8X1-1/4 BOLT
3	5	BLT516X1CNC	5/16X1 CARRIAGE BOLT
4	10	NUT14NC	1/4" NUT
5	10	NUT38NC	3/8" NUT
6	5	NUT516NC	5/16" NUT
7	1	SPMAGNET2400	DISCHARGE MAGNET
8	1	VM100169	BELT RETAINER
9	1	VM100265	MAGNET DEFLECTOR BELT
10	1	VM100302	BOTTOM RUBBER DEFLECTOR
11	1	VM700059	DISCHARGE DEFLECTOR
12	2	VM700321	DEFLECTOR BRACKET
13	10	WSH14FENSS	1/4X1-1/4 STAINLESS FENDER WASHER
14	10	WSH14LOCK	1/4" LOCK WASHER
15	6	WSH38FLAT	3/8" FLAT WASHER
16	6	WSH38LOCK	3/8" LOCK WASHER
17	5	WSH516LOCK	5/16" LOCK WASHER

OPTIONAL DISCHARGE ACCESSORIES

VM900151 DEFLECTOR KIT

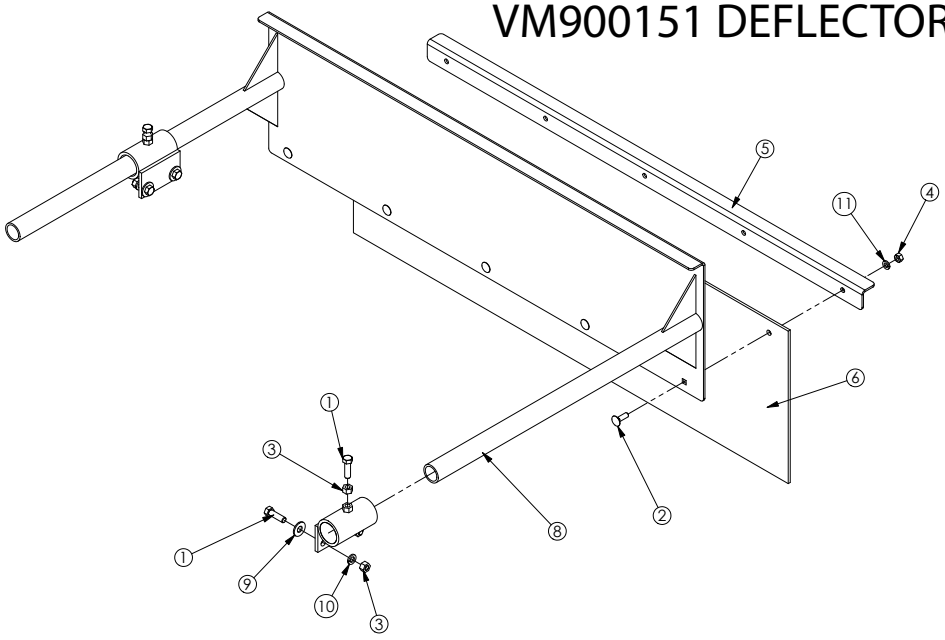

ITEM #	QTY.	PART #	DESCRIPTION
1	6	BLT38X114NC	3/8X1-1/4 BOLT
2	5	BLT516X1CNC	5/16X1 CARRIAGE BOLT
3	6	NUT38NC	3/8" NUT
4	5	NUT516NC	5/16" NUT
5	1	VM100169	BELT RETAINER
6	1	VM100170	DEFLECTOR BELT
7	2	VM700058	DEFLECTOR BRACKET
8	1	VM700059	DISCHARGE DEFLECTOR
9	4	WSH38FLAT	3/8" FLAT WASHER
10	4	WSH38LOCK	3/8" LOCK WASHER
11	5	WSH516LOCK	5/16" LOCK WASHER

VM900260 FLAP DEFLECTOR KIT

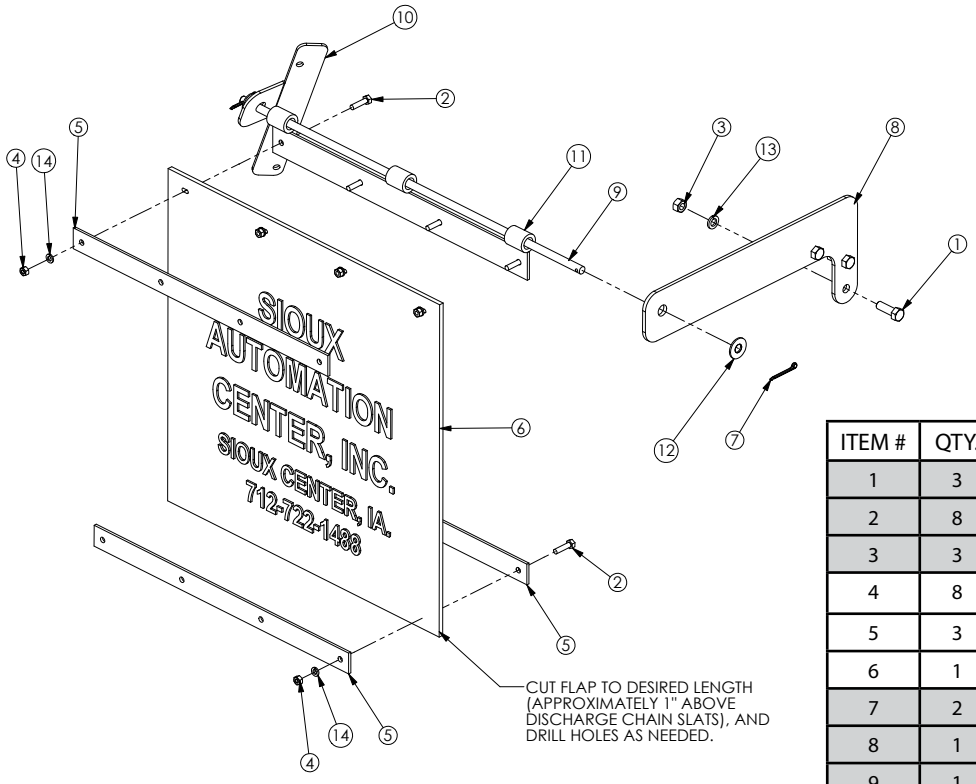

ITEM #	QTY.	PART #	DESCRIPTION
1	3	BLT12X112NC	1/2X1-1/2 BOLT
2	8	BLT516X114NC	5/16X1-1/4 BOLT
3	3	NUT12NC	1/2" NUT
4	8	NUT516NC	5/16" NUT
5	3	SAC56009	MUD FLAP STRAP
6	1	SACFLAP24X36	MUD FLAP
7	2	SPCP18X2	1/8X2 COTTER PIN
8	1	VM100540	FLAP BRACKET
9	1	VM100541	ROD
10	1	VM100543	TUB BRACKET
11	1	VM700236	FLAP BRACKET WELDMENT
12	2	WSH12FLAT	1/2" FLAT WASHER
13	3	WSH12LOCK	1/2" LOCK WASHER
14	8	WSH516LOCK	5/16" LOCK WASHER

OPTIONAL DISCHARGE ACCESSORIES

VM900330 DUAL DROP CAP OPTION

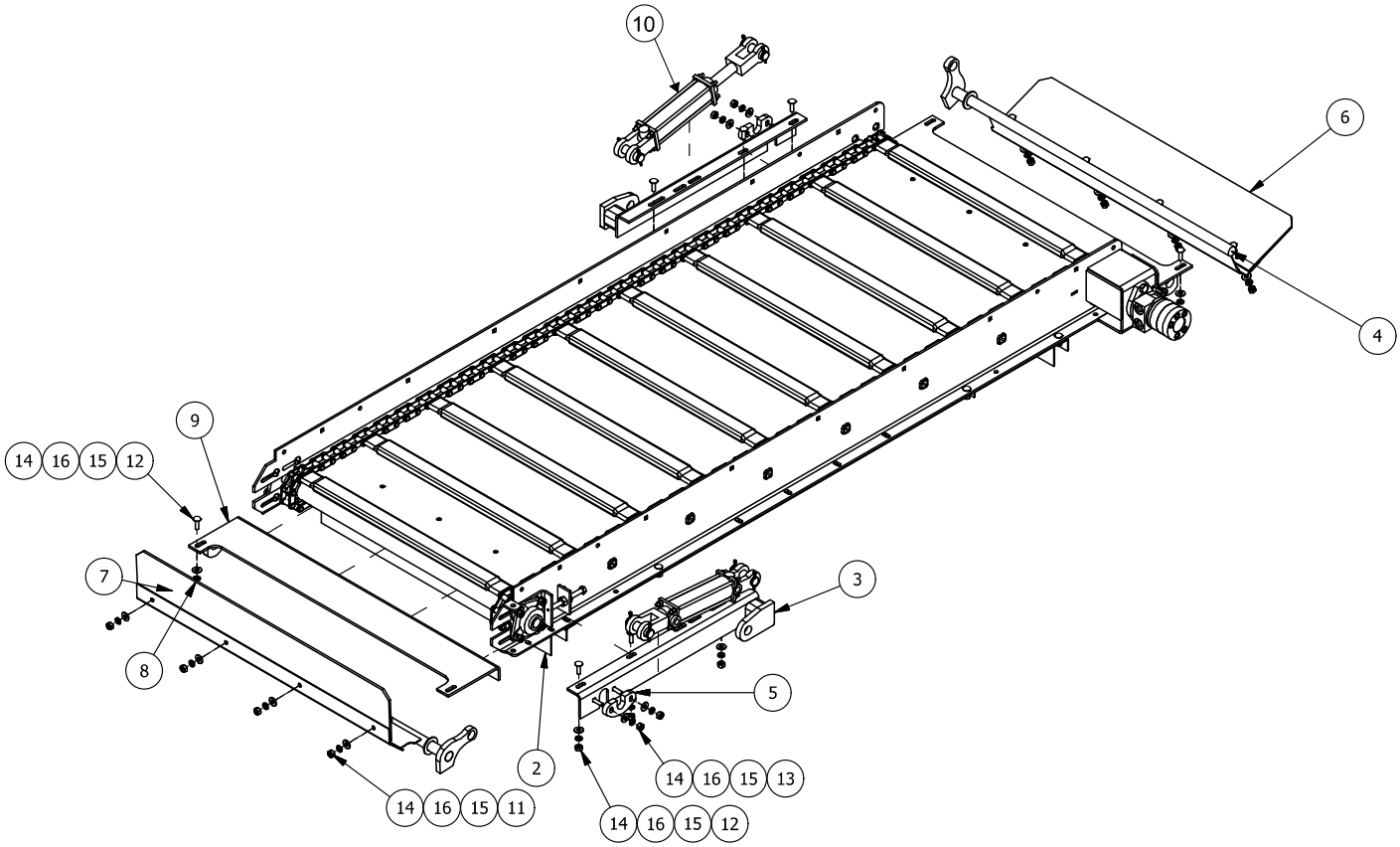

ITEM #	QTY.	PART #	DESCRIPTION
1	1	VM100198	SHIELD SUPPORT ANGLE
2	1	VM100200	RUBBER FLAP
3	2	VM700299	CYLINDER BRACKET
4	1	VM700300	DRIVE END DROP CAP
5	2	VM100732	DROP CAP RETAINER
6	1	VM100733	DROP CAP SHIELD
7	1	VM700301	IDLER END DROP CAP
8	1	VM100734	DROP CAP END SHIELD
9	2	VM700302	DROP CAP LOWER SHIELD
10	1	VM900316	DROP CAP HYDRAULIC KIT
11	12	BLT38X1CNC	3/8X1 CARRIAGE BOLT
12	12	BLT38X114CNC	3/8X1-1/4 CARRIAGE BOLT
13	4	BLT38X112CNC	38X1-1/2 CARRIAGE BOLT
14	28	NUT38NC	3/8" NUT
15	28	WSH38FLAT	3/8" FLAT WASHER
16	28	WSH38LOCK	3/8" LOCK WASHER

VM900316 DUAL DROP CAP HYDRAULIC KIT

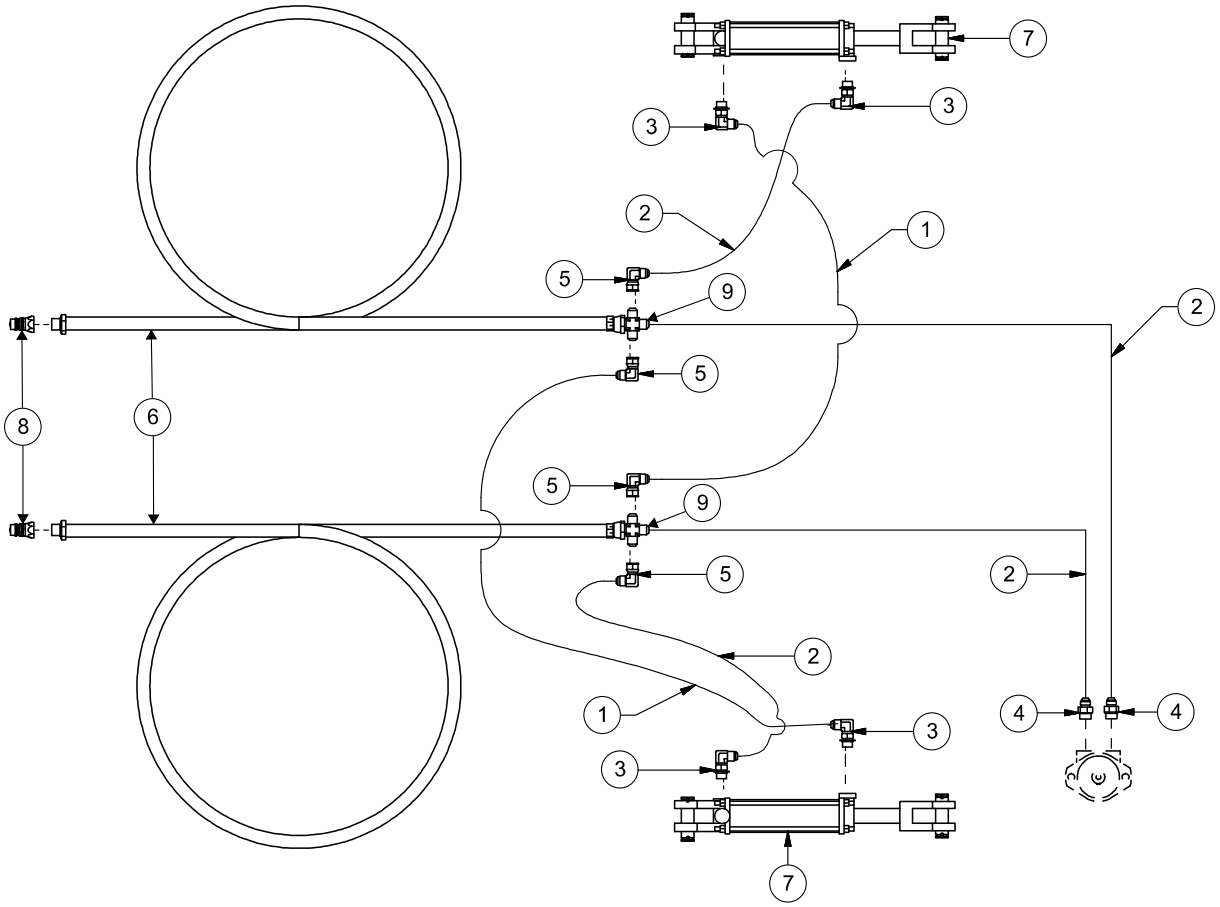

ITEM #	QTY.	PART #	DESCRIPTION
1	2	MON700408	HYDRAULIC HOSE
2	4	MON700393	HYDRAULIC HOSE
3	4	HYD6801-8-8	ADAPTER
4	2	HYD6400-8-10	ADAPTER
5	4	HYD6500-8-8	ELBOW ADAPTER
6	2	MON700566	HYDRAULIC HOSE
7	2	HYDPMC8406	6" CYLINDER
7A	1	HYDPMCK8400	CYLINDER SEAL KIT
8	2	HYDS7115	COUPLER TIP
9	2	HYD2650-8	CROSS ADAPTER

GEARBOX LUBRICATION SYSTEM

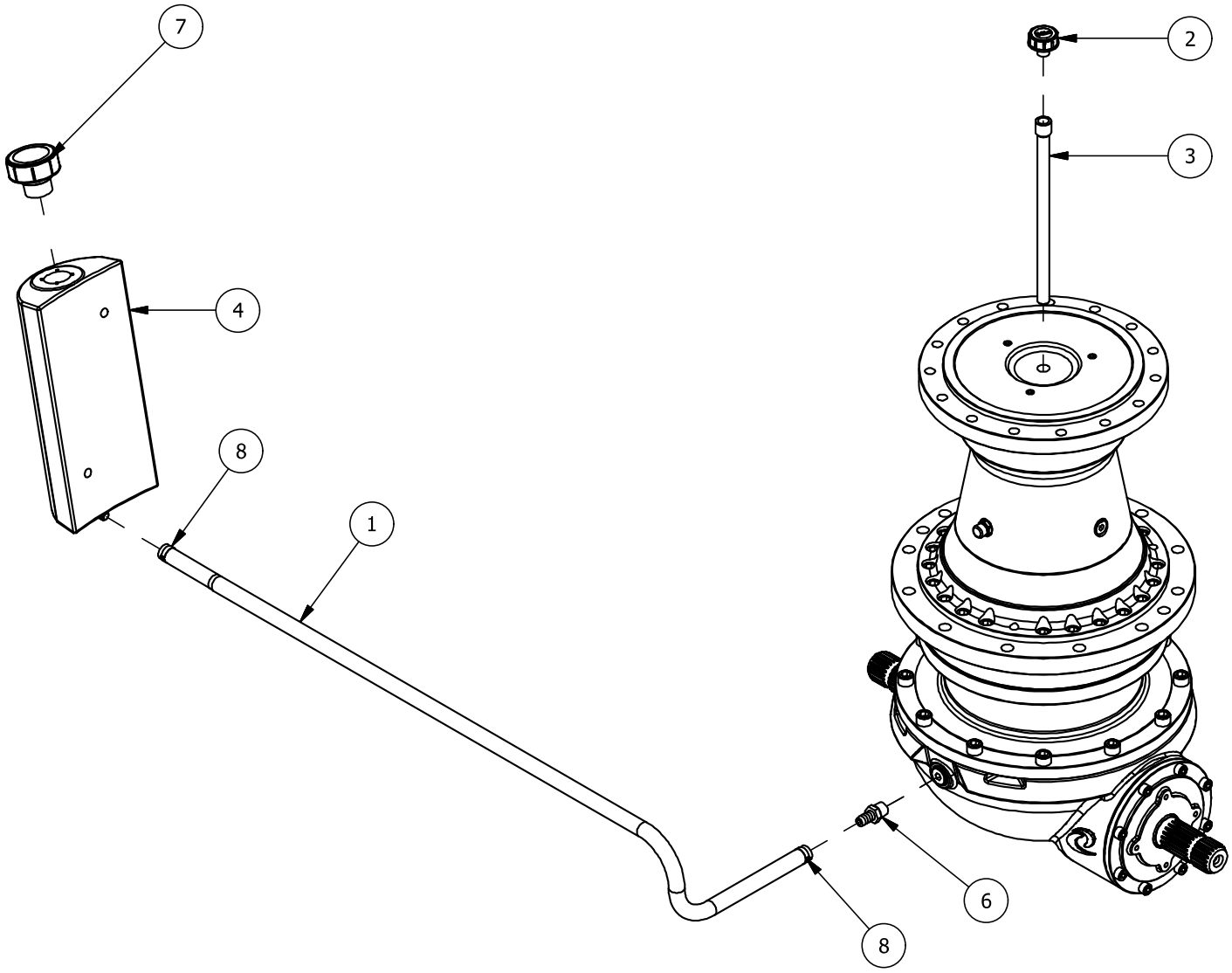

ITEM #	QTY.	PART #	DESCRIPTION
1	1	VM100730	OIL HOSE
2	1	VM800072	BREATHER CAP
3	1	VM100731	BREATHER EXTENSION
4	1	VM100729	OIL RESERVOIR
5	1	VM800462	PLASTIC TANK ELBOW
6	1	HYD2113-6-8	ADAPTER
7	1	VM800461	TANK BREATHER CAP
8	2	SPHCLU5	HOSE CLAMP

GREASE LINE ASSEMBLY

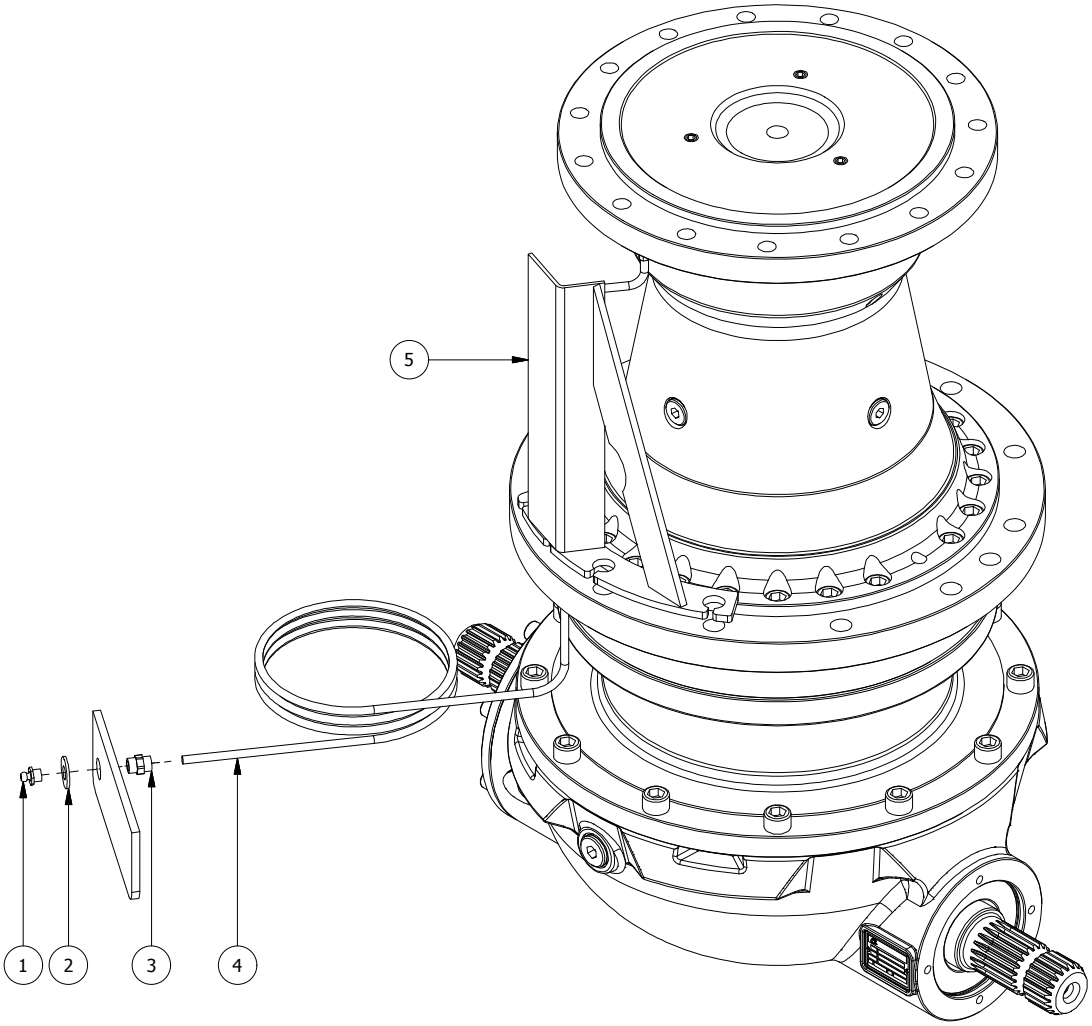

ITEM #	QTY.	PART #	DESCRIPTION
1	1	SPGZRK610	GREASE ZERK
2	1	WSH38FLAT	3/8" FLAT WASHER
3	1	HYD5000-2-2	ADAPTER
4	1	VM800073	GREASE LINE
5	1	VM700090	LINE PROTECTOR

BEARINGS & SEALS FOR PLANETARY GEARBOX

NOTE: PARTS ARE THE SAME FOR BOTH VM800080 & VM800081 PLANETARY GEARBOXES

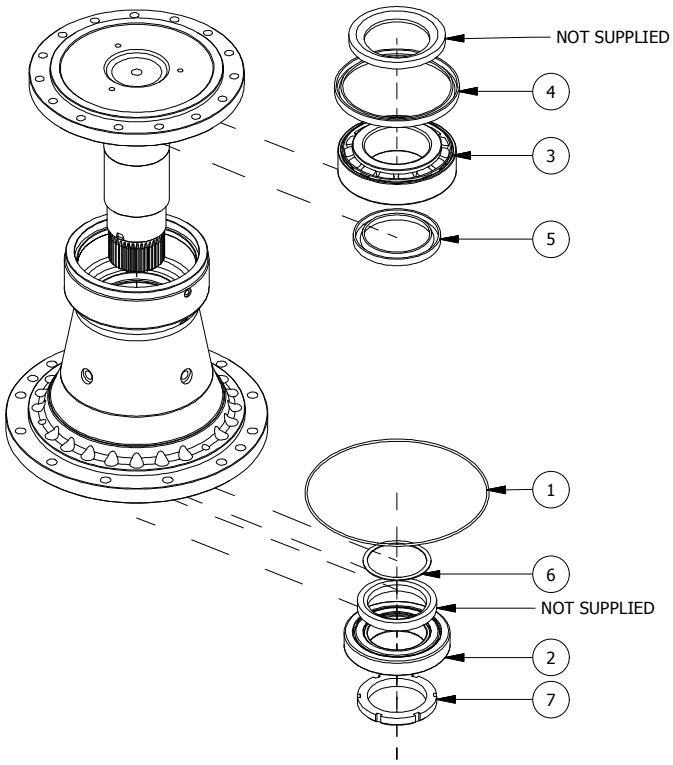

ITEM #	QTY.	PART #	DESCRIPTION
1	1	VM100578	O-RING
2	1	TIM32221	BEARING
3	1	TIM30219	BEARING
4	1	VM100571	OIL SEAL
5	1	VM100572	OIL SEAL
6	1	VM100576	SHIM
7	1	VM100573	RING NUT
8	1	TIM32211	BEARING
9	1	TIM30315	BEARING
10	1	VM100861	SHIM
11	2	VM100575	RETAINER CLIP
12	1	VM100577	O-RING
13	1	VM100578	O-RING
14	1	VM100579	SHIM

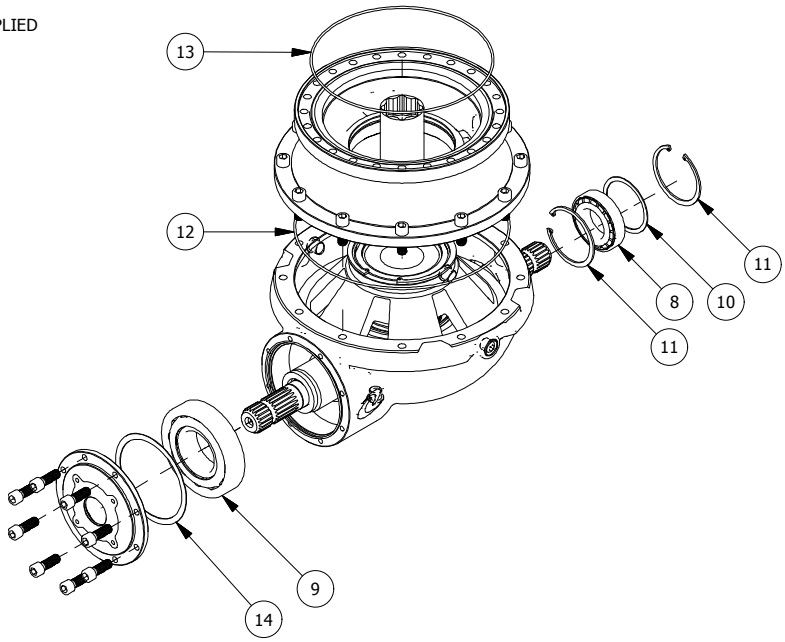

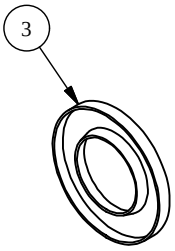

INPUT/OUTPUT SHAFT SEALS

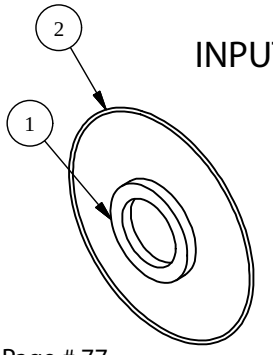

ITEM #	QTY.	PART #	DESCRIPTION
1	1	VM100568	FRONT OIL SEAL
2	1	VM100570	O-RING
3	1	VM100569	REAR OIL SEAL

SINGLE AUGER DRIVELINE WITHOUT 2 SPEED GEARBOX ASSEMBLY

APPLICABLE MODELS: 3640, 3645, 3650 AND 3655

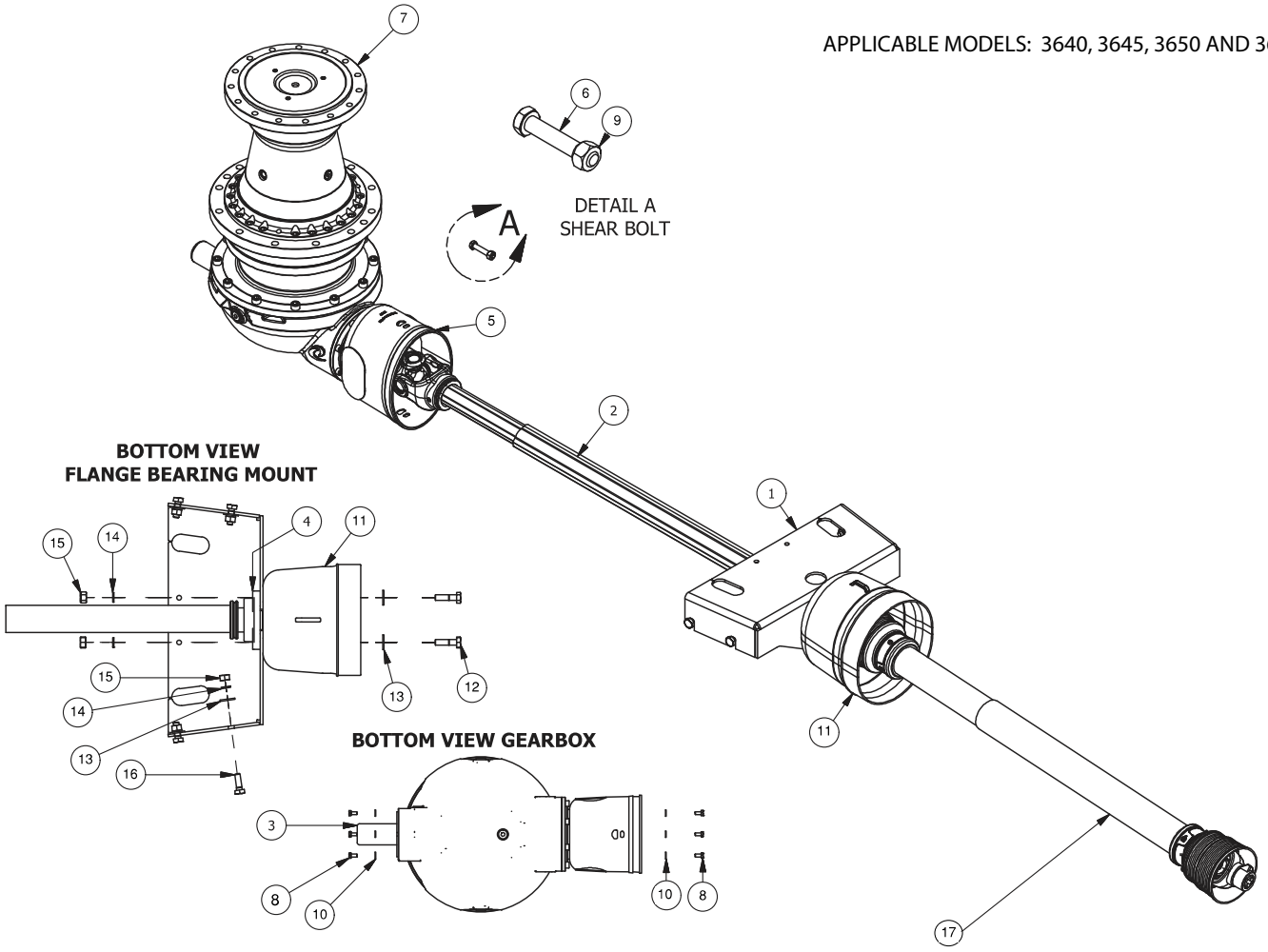

ITEM #	3640 QTY.	3645 QTY.	3650 QTY.	3655 QTY.	PART #	DESCRIPTION
1	1	1	1	1	VM100654	FLANGE MOUNTING BRACKET
2	1	1	1	1	VM800077	PTO, 1-3/4, 20 SPLINE
3	1	1	1	1	VM800378	PTO TAIL SHAFT COVER
4	1	1	1	1	BRGUCF209-28	4 BOLT FLANGE BEARING, 1-3/4
5	1	1	1	1	VM800377	DRIVESHAFT CONE WITH FLAPS
6	1	1	1	1	BLT12X65MM	12MM X 65MM BOLT, GR 8.8
7	1	1	1	1	VM800080	PLANETARY GEARBOX
8	8	8	8	8	BLT8X16MM	8MM X 16MM BOLT, GR 8.8
9	1	1	1	1	NUT12MMLOCK	12MM LOCK NUT
10	8	8	8	8	WSH516FLAT	5/16" FLAT WASHER
11	1	1	1	1	VM800307	PTO SHAFT GUARD
12	4	4	4	4	BLT12X2NC	1/2 X 2 BOLT
13	8	8	8	8	WSH12FLAT	1/2" FLAT WASHER
14	8	8	8	8	WSH12LOCK	1/2" LOCK WASHER
15	8	8	8	8	NUT12NC	1/2" NUT
16	4	4	4	4	BLT12X112NC	1/2X1-1/2 BOLT
17	1	1	-	-	VM900199	CV PTO, 35R, 540RPM, 1-3/8
	-	-	1	1	VM900136	CV PTO, 55E, 540RPM, 1-3/8

SINGLE AUGER DRIVELINE WITH 2 SPEED GEARBOX ASSEMBLY

APPLICABLE MODELS: 3640, 3645, 3650 AND 3655

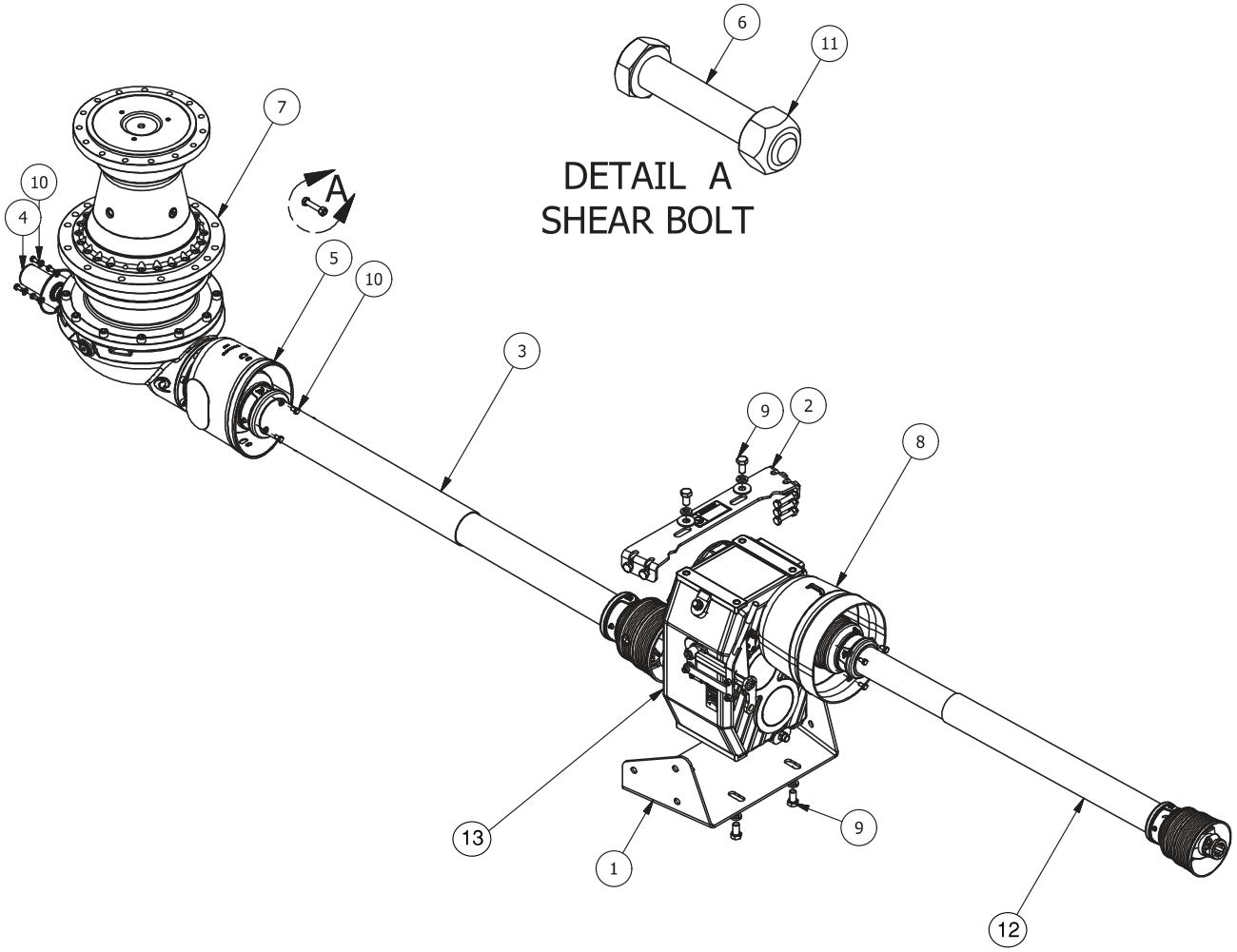

ITEM #	3640 QTY.	3645 QTY.	3650 QTY.	3655 QTY.	PART #	DESCRIPTION
1	1	1	1	1	VM100235	2 SPEED LOWER BRACKET
2	1	1	1	1	VM100236	2 SPEED UPPER BRACKET
3	1	1	1	1	VM800075	PTO, 2 SPEED PLANETARY
4	1	1	1	1	VM800378	PTO TAIL SHAFT COVER
5	1	1	1	1	VM800377	PTO SHAFT GUARD
6	4	4	4	4	BLT12X65MM	12MM X 65MM BOLT, GR 8.8
7	1	1	1	1	VM800080	PLANETARY GEARBOX
8	1	1	1	1	VM800307	PTO SHAFT GUARD
9	6	6	6	6	BLT16X30MM10.9	16MM X 30MM BOLT, GRADE 10.9
10	12	12	12	12	BLT8X16MM	8MMX16MM BOLT, GR 8.8
11	4	4	4	4	NUT12MMLOCK	12MM LOCK NUT
12	1	1	-	-	VM900199	CV PTO, 35R, 540RPM, 1-3/8
	-	-	1	1	VM900136	CV PTO, 55E, 540RPM, 1-3/8
13	1	1	1	1	VM800463	2 SPEED GEARBOX, 1.8:1 AP502
	1	1	1	1	VM800464	2 SPEED GEARBOX, 1.3:1 AP502
	1	1	1	1	VM800330	2 SPEED GEARBOX, 1.8:1,2.7:1 AP502
14	1	1	1	1	VM900326	2 SPEED SHIFT BRACKET KIT
15	12	12	12	12	WSH516FLATSS	5/16" STAINLESS FLAT WASHER

NOTE: ONLY QTY ONE OF ITEM 13 IS AVAILABLE ON A MIXER, HOWEVER THERE ARE THREE DIFFERENT OPTIONS.

TWIN AUGER DRIVELINE WITHOUT 2 SPEED GEARBOX ASSEMBLY

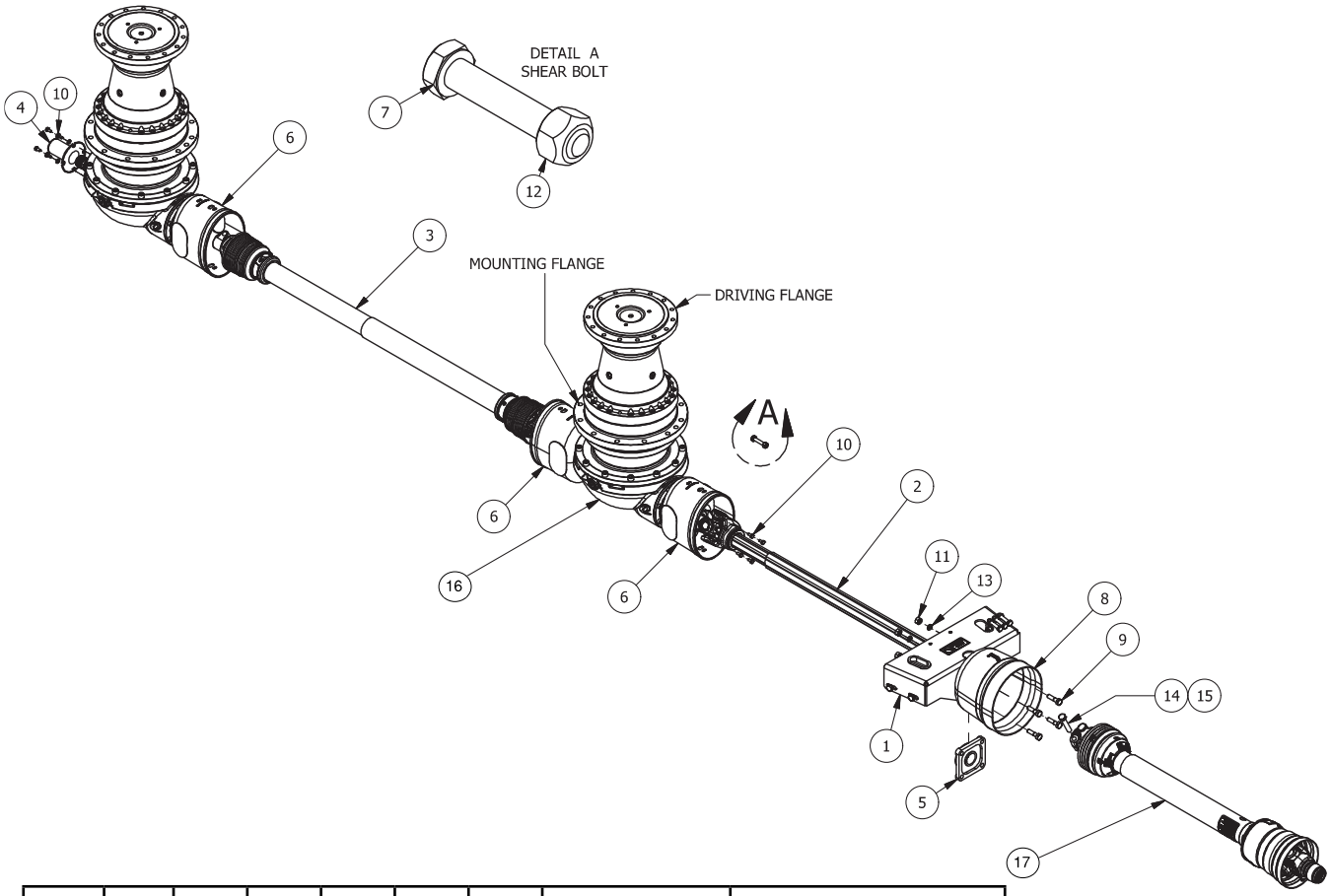

ITEM #	3670 QTY.	3675 QTY.	3680 QTY.	3690 QTY.	36100 QTY.	36125 QTY.	PART #	DESCRIPTION
1	1	1	1	-	-	-	VM100654	FLANGE MOUNTING BRACKET
	-	-	-	1	1	1	VM100862	FLANGE MOUNTING BRACKET
2	1	1	1	1	1	1	VM800077	PTO, 1-3/4, 20 SPLINE
3	1	1	1	1	1	1	VM800089	PTO BETWEEN GEARBOXES
4	1	1	1	1	1	1	VM800378	PTO TAIL SHAFT COVER
5	1	1	1	1	1	1	BRGUCF209-28	4 BOLT FLANGE BEARING, 1-3/4
6	3	3	3	3	3	3	VM800377	DRIVESHAFT CONE WITH FLAPS
7	1	1	1	1	1	1	BLT12X65MM	12MMX65MM BOLT, GR 8.8
8	1	1	1	1	1	1	VM800307	PTO SHAFT GUARD
9	4	4	4	4	4	4	BLT12X2NC	1/2X2 BOLT
10	16	16	16	16	16	16	BLT8X16MM	8MM X 16MM BOLT, GR 8.8
11	8	8	8	8	8	8	NUT12NC	1/2" NUT
12	4	4	4	4	4	4	NUT12MMLOCK	12MM LOCKNUT
13	8	8	8	8	8	8	WSH12LOCK	1/2" LOCK WASHER
14	1	1	1	1	1	1	BLT58X314NCG8	5/8X3-1/4 BOLT, GRADE 8
15	1	1	1	1	1	1	NUT58NYLOCKNCG8	5/8" NYLON LOCK NUT, GRADE 8
16	2	2	-	-	-	-	VM800080	PLANETARY GEARBOX 540
	-	-	2	2	2	-	VM800081	PLANETARY GEARBOX 1000
	-	-	-	-	-	2	VM800379	PLANETARY GEARBOX 28.1:1
17	1	1	-	-	-	-	VM900136	PTO, 55E, 540RPM, 1.-3/8
	-	-	1	1	1	1	VM900137	PTO, 55E, 1000RPM, 1-3/8
	-	-	1	1	1	1	VM900138	PTO, 55E, 1000RPM, 1-3/4
18	16	16	16	16	16	16	WSH516FLATSS	5/16" STAINLESS FLAT WASHER

NOTE: ONLY QTY TWO OF ITEM 16 IS AVAILABLE ON A MIXER, HOWEVER THERE ARE THREE DIFFERENT OPTIONS.

TWIN AUGER DRIVELINE WITH 2 SPEED GEARBOX ASSEMBLY

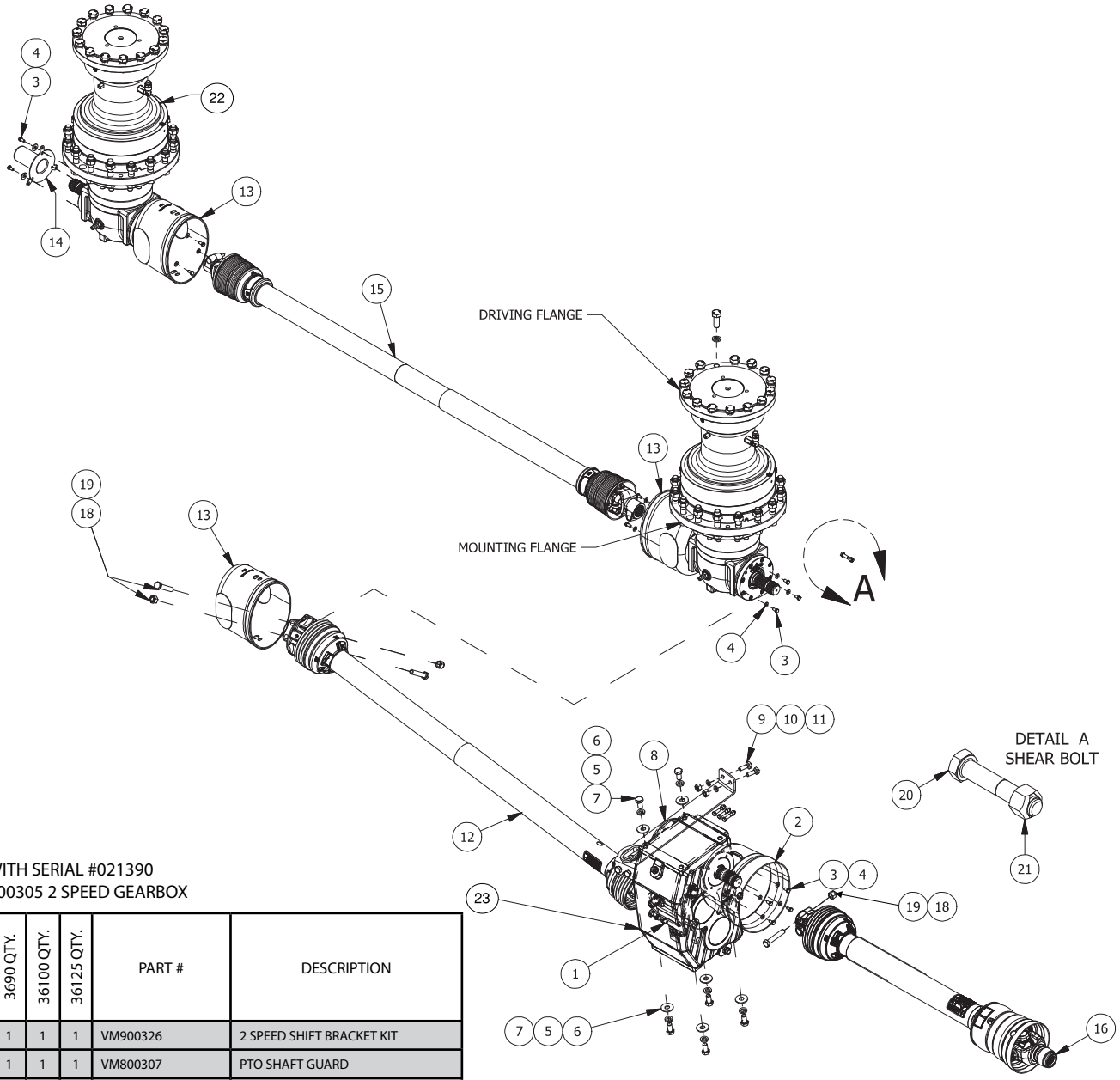

NOTE: UNIT WITH SERIAL #021390
UTILIZES VM800305 2 SPEED GEARBOX

ITEM #	3670 QTY.	3675 QTY.	3680 QTY.	3690 QTY.	36100 QTY.	36125 QTY.	PART #	DESCRIPTION
1	1	1	1	1	1	1	VM900326	2 SPEED SHIFT BRACKET KIT
2	1	1	1	1	1	1	VM800307	PTO SHAFT GUARD
3	16	16	16	16	16	16	BLT8X16MM	8MM X 16MM BOLT, GR 8.8
4	16	16	16	16	16	16	WSH516FLAT	5/16" FLAT WASHER
5	6	6	6	6	6	6	WSH58LOCK	5/8" LOCK WASHER
6	6	6	6	6	6	6	WSH58FLAT	5/8" FLAT WASHER
7	6	6	6	6	6	6	BLT16X30MM10.9	16MMX30MM BOLT, GR 10.9
8	1	1	1	-	-	-	VM100236	2 SPEED UPPER BRACKET (ODG)
	-	-	-	1	1	1	VM100740	2 SPEED UPPER BRACKET (AP602)
9	4	4	4	4	4	4	BLT12X112NC	1/2X1-1/2 BOLT
10	4	4	4	4	4	4	WSH12LOCK	1/2" LOCK WASHER
11	4	4	4	4	4	4	NUT12NC	1/2" NUT
12	1	1	1	1	1	1	VM8003321	PTO, 2 SPEED PLANETARY
13	3	3	3	3	3	3	VM800377	DRIVESHAFT CONE WITH FLAPS
14	1	1	1	1	1	-	VM800378	PTO TAIL SHAFT COVER
	-	-	-	-	-	1	VM800357	PTO TAIL SHAFT COVER, BREVINI
15	1	1	1	1	1	1	VM800089	PTO BETWEEN GEARBOXES
16	1	1	1	1	1	1	VM900136	PTO, 55E, 540RPM, 1-3/8
	1	1	1	1	1	1	VM900137	PTO, 55E, 1000RPM, 1-3/8
	1	1	1	1	1	1	VM900138	PTO, 55E, 1000RPM, 1-3/4

ITEM #	3670 QTY.	3675 QTY.	3680 QTY.	3690 QTY.	36100 QTY.	36125 QTY.	PART #	DESCRIPTION
18	3	3	3	3	3	3	BLT58X314G8	5/8X3-1/4 BOLT, GRADE 8
19	3	3	3	3	3	3	NUT58NYLOCKNCG8	5/8" NYLON LOCK NUT, GR 8
20	-	-	-	1	1	1	BLT38X2GR8	3/8X2 BOLT, GR 8
	1	1	1	-	-	-	BLT12X65MM	12MMX65MM BOLT, GR 8.8
21	-	-	-	1	1	1	NUT38LOCKNC	3/8" LOCK NUT, GR 8
	1	1	1	-	-	-	NUT12MMLOCK	12MM LOCK NUT
22	1	1	-	-	-	-	VM800080	PLANETARY GEARBOX, 1602
	-	-	1	1	1	-	VM800081	PLANETARY GEARBOX, 1603
	-	-	-	-	-	1	VM800379	PLANETARY GEARBOX, BREVINI,28,1:1
23	1	1	1	-	-	-	VM800330	2 SPEED GEARBOX, 1.8:1,2.7:1 AP502
	1	1	1	-	-	-	VM800463	2 SPEED GEARBOX, 1.8:1 AP502
	1	1	1	-	-	-	VM800464	2 SPEED GEARBOX, 1.3:1 AP502
	-	-	-	1	1	1	VM800465	2 SPEED GEARBOX, 1.3:1 ODG
	-	-	-	1	1	1	VM800466	2 SPEED GEARBOX, 1.8:1 ODG

DRIVELINE CONVERSION KITS

PART #	DESCRIPTION	APPLICABLE TWIN AUGER MODELS
VM900301	2 SPEED GEARBOX, 1.3:1, AP602, CONVERSION KIT	SERIAL #021390 UNIT
VM900323	2 SPEED GEARBOX, 1.3:1 AP502 CONVERSION KIT	3640, 3645, 3650, 3655, 3670, 3675 & 3680
VM900324	2 SPEED GEARBOX, 1.8:1 AP502 CONVERSION KIT	3640, 3645, 3650, 3655, 3670, 3675 & 3680
VM900325	2 SPEED GEARBOX, 1.8:1-2.7:1 AP502 CONVERSION KIT	3640, 3645, 3650, 3655, 3670, 3675 & 3680
VM900380	2 SPPED GEARBOX 1.3:1, ODG CONVERSION KIT	3690, 36100 & 36125
VM900381	2 SPEED GEARBOX 1.8:1, ODG CONVERSION KIT	3690, 36100 & 36125

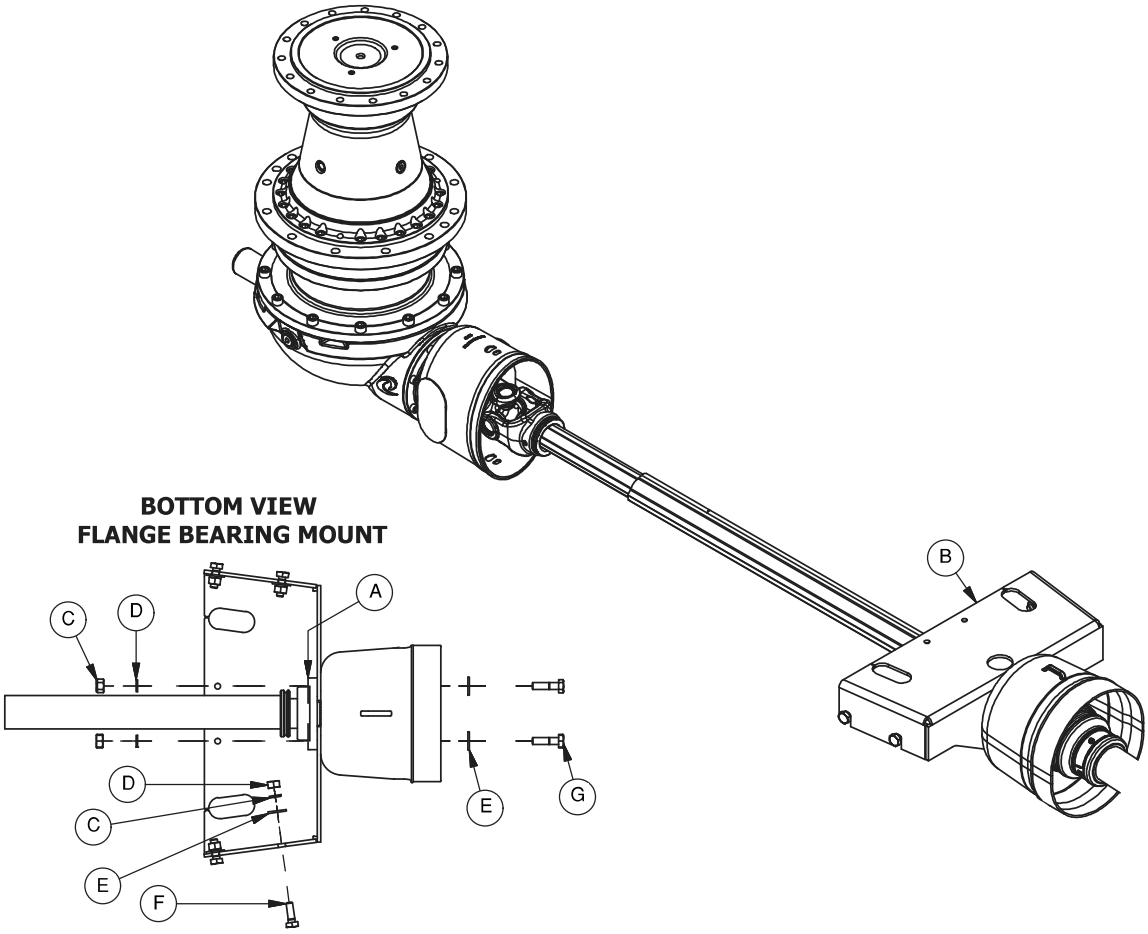

REMOVE THE FOLLOWING:							
ITEM #	VM900323 QTY	VM900324 QTY	VM900325 QTY	VM900380 QTY	VM900381 QTY	PART #	DESCRIPTION
A	1	1	1	1	1	BRGUCF209-28	4 BOLT FLANGE BEARING
B	1	1	1	-	-	VM100654	FLANGE MOUNTING BRACKET
C	8	8	8	8	8	NUT12NC	1/2" NUT
D	8	8	8	8	8	WSH12LOCK	1/2" LOCK WASHER
E	8	8	8	8	8	WSH12FLAT	1/2" FLAT WASHER
F	4	4	4	4	4	BLT12X112NC	1/2X1-1/2 BOLT
G	4	4	4	4	4	BLT12X2NC	1/2X2 BOLT

DRIVELINE CONVERSION KITS

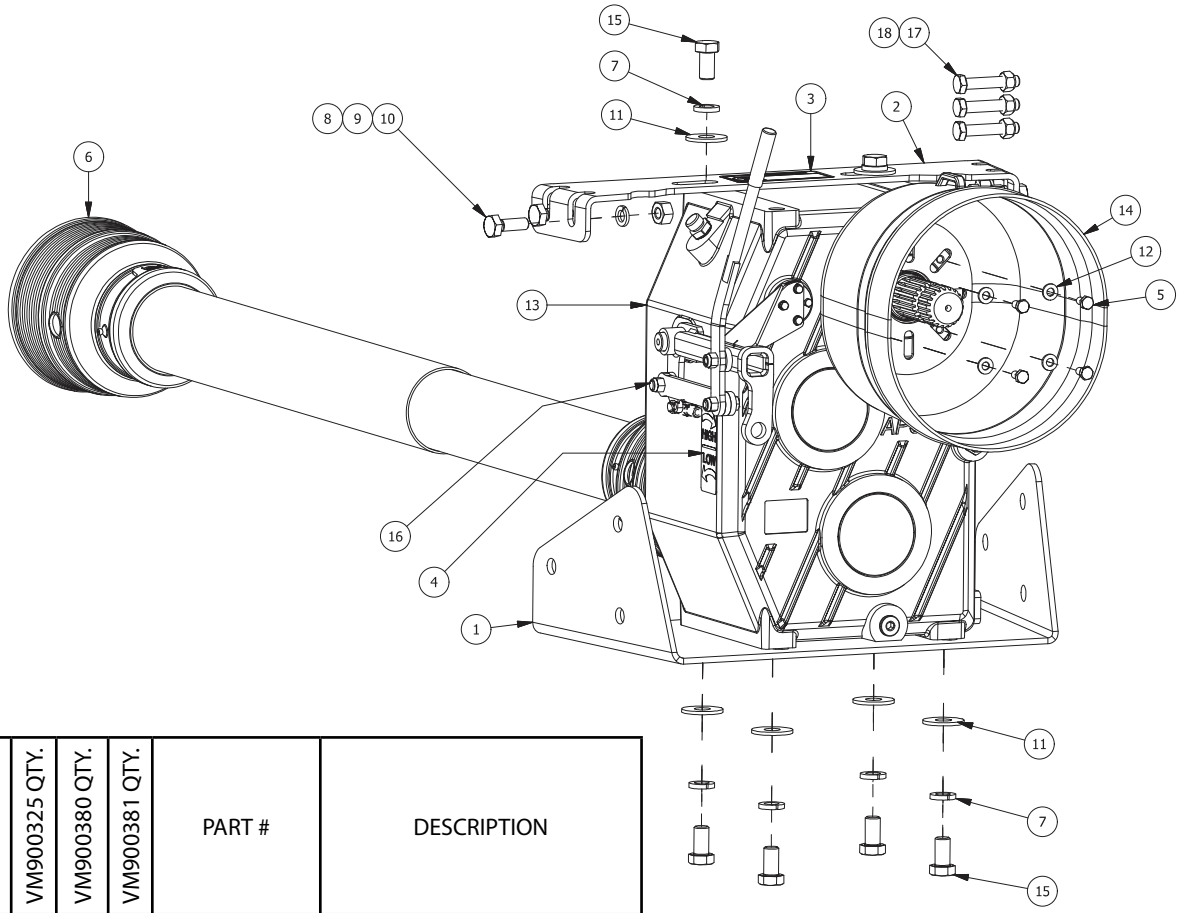

ITEM #	VM900323 QTY.	VM900324 QTY.	VM900325 QTY.	VM900380 QTY.	VM900381 QTY.	PART #	DESCRIPTION
1	1	1	1	-	-	VM100235	2 SPEED LOWER BRACKET
2	1	1	1	-	-	VM100236	2 SPEED UPPER BRACKET
	-	-	-	1	1	VM100740	2 SPEED UPPER BRACKET
3	1	1	1	-	-	VM800334	ISO DECAL
4	1	1	1	1	1	VM800331	2 SPEED SHIFTER DECAL
5	4	4	4	4	4	BLT8X16MM	8MM X 16MM BOLT, GR 8.8
6	1	1	1	-	-	VM800075	PTO, 2 SPEED PLANETARY
	-	-	-	1	1	VM800332	PTO, 2 SPEED PLANETARY
7	6	6	6	6	6	WSH58LOCK	5/8" LOCK WASHER
8	4	4	4	4	4	NUT12NC	1/2" NUT
9	4	4	4	4	4	WSH12LOCK	1/2" LOCK WASHER
10	4	4	4	4	4	BLT12X112NC	1/2X1-1/2 BOLT
11	6	6	6	6	6	WSH58FLAT	5/8" FLAT WASHER
12	4	6	6	4	4	WSH516FLATSS	5/16" FLAT WASHER, SS
13	-	-	1	-	-	VM800330	2 SPEED GEARBOX, 1.8:1,2.7:1 AP502
	-	1	-	-	-	VM800463	2 SPEED GEARBOX, 1.8:1 AP502
	1	-	-	-	-	VM800464	2 SPEED GEARBOX, 1.3:1 AP502
	-	-	-	1	-	VM800465	2 SPEED GEARBOX, 1.3:1
	-	-	-	-	1	VM800466	2 SPEED GEARBOX, 1.8:1
14	1	1	1	1	1	VM800307	PTO SHAFT GUARD
15	6	6	6	6	6	BLT16X30MM10.9	16MMX30MM BOLT, GR 10.9
16	1	1	1	-	-	VM900326	2 SPEED SHIFT BRACKET KIT
	-	-	-	1	1	VM900379	ODG 2 SPEED SHIFT BRACKET KIT

VM800305 GEARBOX, AP602, 1.3:1

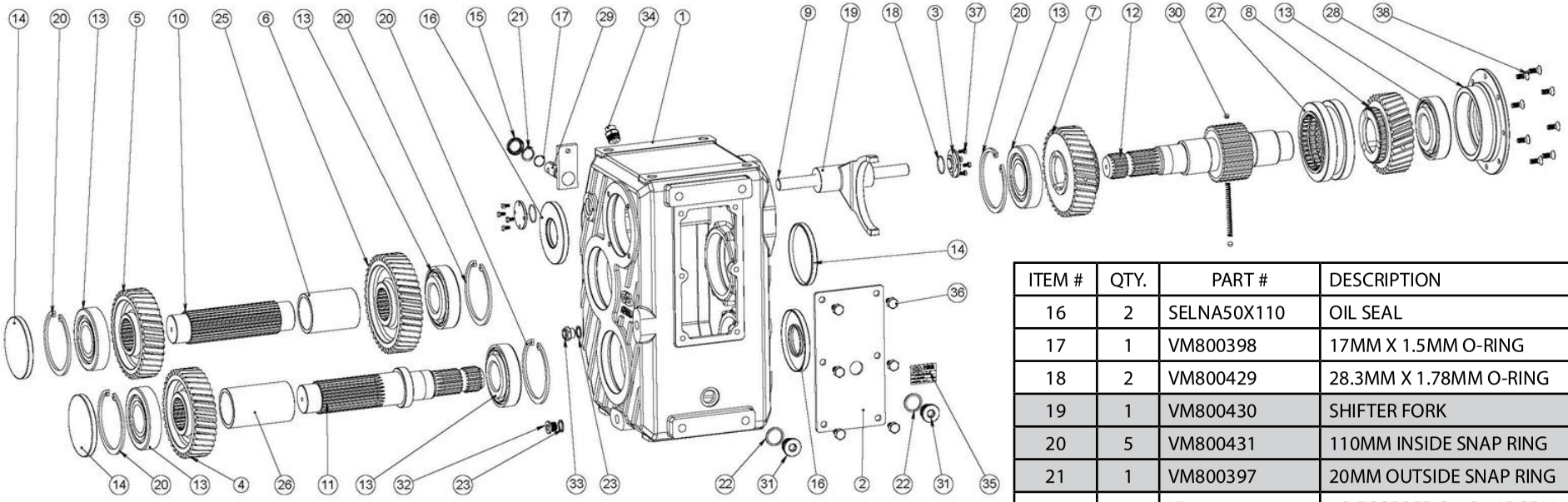

ITEM #	QTY.	PART #	DESCRIPTION
1	1	VM800423	HOUSING
2	1	VM800381	COVER
3	1	VM800424	CLOSED FLANGE
4	1	VM800416	36T OUTPUT SHAFT GEAR
5	1	VM800415	36T INTERMEDIATE SHAFT GEAR
6	1	VM800452	46T INTERMEDIATE SHAFT GEAR
7	1	VM800410	36T JACKSHAFT GEAR
8	1	VM800453	25T JACKSHAFT PINION GEAR
9	1	VM800425	GEAR SHIFT SHAFT
10	1	VM800426	INTERMEDIATE SHAFT
11	1	VM800427	OUTPUT SHAFT
12	1	VM800385	INPUT SHAFT
13	6	VM800454	SHAFT BEARING
14	3	VM800455	COVER CAP
15	1	VM800438	MODEL/SERIAL NAMEPLATE

ITEM #	QTY.	PART #	DESCRIPTION
16	2	SELNA50X110	OIL SEAL
17	1	VM800398	17MM X 1.5MM O-RING
18	2	VM800429	28.3MM X 1.78MM O-RING
19	1	VM800430	SHIFTER FORK
20	5	VM800431	110MM INSIDE SNAP RING
21	1	VM800397	20MM OUTSIDE SNAP RING
22	2	VM800405	3/4" COPPER OIL PLUG SEAL
23	2	VM800402	3/8" COPPER OIL PLUG SEAL
24	1	VM800432	GEAR SPRING
25	1	VM800433	90.5MM SPACER RING
26	1	VM800434	115.5MM SPACER RING
27	1	VM800435	CLUTCH GEAR BUSHING
28	1	VM800436	CLOSED BEARING FLANGE
29	1	VM800396	INTERNAL SHIFT LEVER
30	2	VM800437	8MM BALL
31	2	VM800404	3/4" OIL PLUG
32	1	VM800403	3/8" OIL PLUG
33	1	VM800400	3/8" OIL LEVEL PLUG
34	1	VM800401	OIL BREATHER PLUG
35	1	VM800438	MODEL/SERIAL NAMEPLATE
36	6	BLT10X16MM	10MM X 16MM HEX HEAD BOLT
37	8	BLT5X10MM	5MM X 10MM HEX HEAD BOLT
38	8	BLT8X20MMFLAT	8MM X 20MM TAPERED FLAT HEAD

VM800465 GEARBOX, ODG, 1.3:1

ITEM #	QTY.	PART #	DESCRIPTION
1	1	VM800480	39T INTERMEDIATE GEAR (1.3:1)
2	1	VM800481	30T INPUT GEAR (1.3:1)
3	1	VM800482	45T INTERMEDIATE GEAR (1.8:1)
4	1	VM800483	25T INPUT GEAR (1.8:1)
5	1	VM800484	35T INPUT GEAR
6	1	VM800485	35T INTERMEDIATE GEAR
7	1	VM800486	35T OUTPUT GEAR
8	1	VM800487	INPUT SHAFT
9	1	VM800488	INTERMEDIATE GEAR
10	1	VM800489	OUTPUT SHAFT
11	1	VM800490	.75 SHIFTER SHAFT
12	1	VM800491	3.2" INTERMEDIATE WASHER
13	1	VM800492	2.555 OUTPUT WASHER
14	2	VM800493	.752 WAVE WASHER
15	1	VM800494	SHIFT COLAR CLUTCH
16	1	VM800495	OUTPUT SIDE HOUSING
17	1	VM800496	INPUT SIDE HOUSING
18	1	VM800497	0 DEG OIL SLINGER
19	1	VM800498	90 DEG OIL SLINGER
20	2	VM800499	6MM BALL
21	2	VM800500	SHIFTER SPRING
22	6	VM800501	TAPER BEARING 110X50X29
23	6	VM800502	WHM-450 RETAINING RING
24	2	VM800503	AA1049-16 OILITE BUSHING
25	2	VM800504	OIL SEAL 110X50X10
26	26	VM800505	98585A115 RETAINING RING
27	1	VM800506	90X110 SHIM SET
28	3	VM800507	OIL SEAL
29	1	VM800508	5/8X7/16X1 11/16 KEY
30	1	VM800509	NAME PLATE
31	1	VM800510	BREATHER 3/8-16 BSPP
32	1	VM800511	3/8-18 NPT MAGNETIC PLUG
33	4	VM800512	110X10 END CAP SEAL

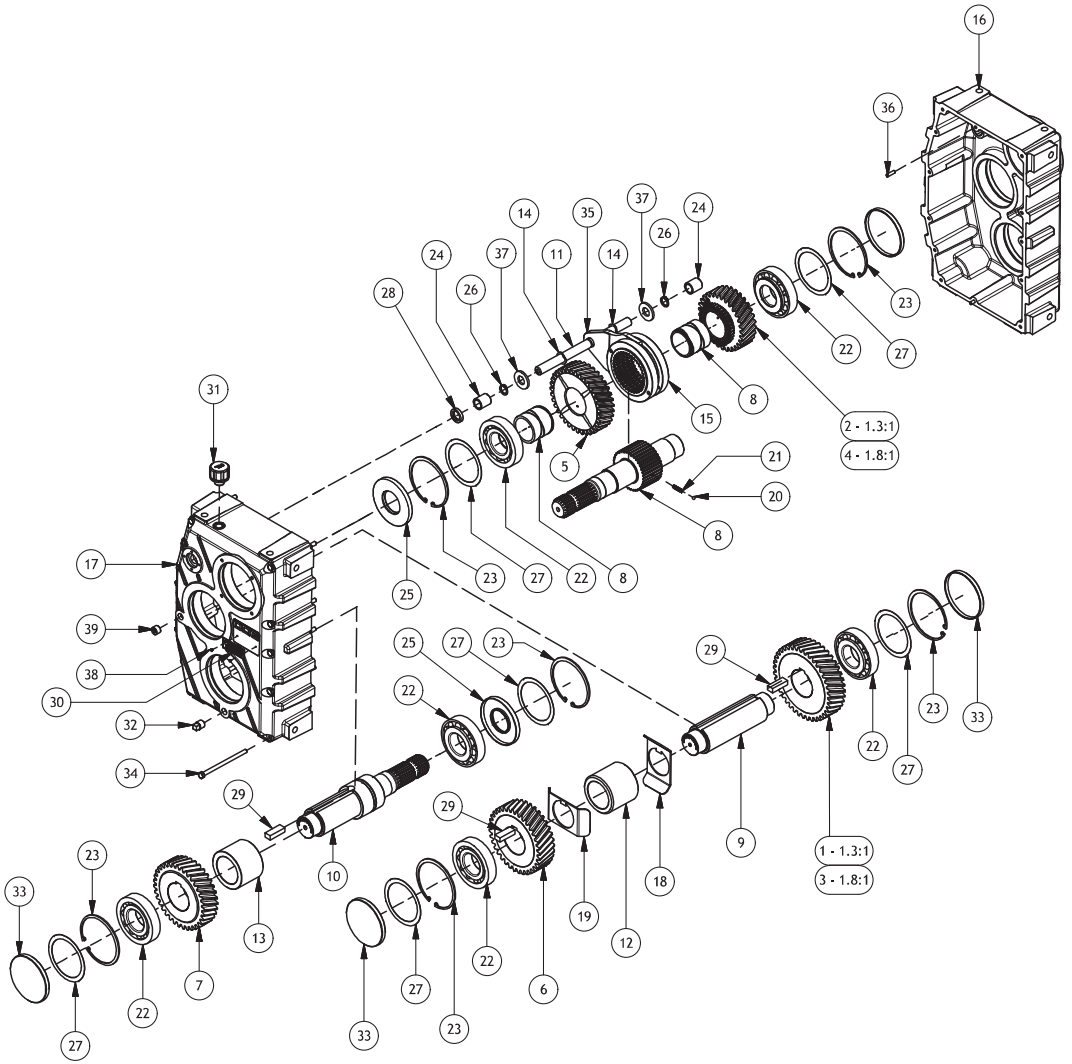

ITEM #	QTY.	PART #	DESCRIPTION
34	11	VM800513	BOLT M8X1.25X130 GR 8.8
35	1	VM800514	SHIFTING FORK
36	2	VM800515	1/4X7/8 DOWEL
37	2	VM800516	.781X1.625X.161 WASHER
38	2	VM800517	NAME PLATE TACK
39	2	VM800518	3/8 NPT PLUG

VM800301 REMOTE SHIFTER KIT

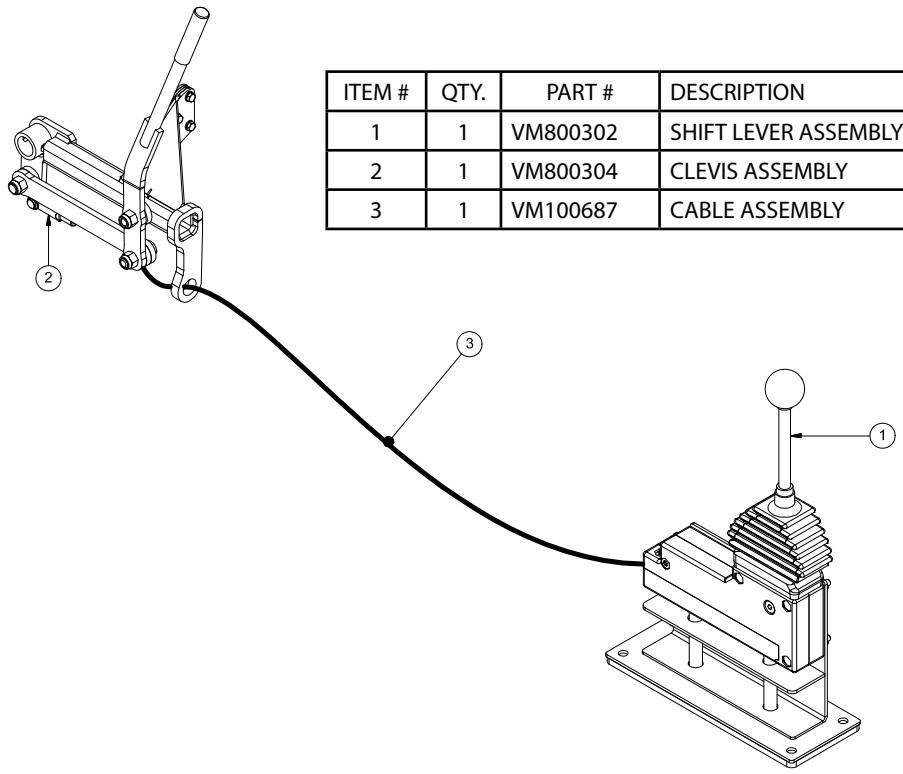

ITEM #	QTY.	PART #	DESCRIPTION
1	1	VM800302	SHIFT LEVER ASSEMBLY
2	1	VM800304	CLEVIS ASSEMBLY
3	1	VM100687	CABLE ASSEMBLY

NOTE: THIS SHIFT KIT IS USED ALONG WITH A VM800305 2 SPEED GEARBOX ON UNIT WITH SERIAL #021390. THIS ALSO FITS ON A VM800308,

VM900379 2 SPEED SHIFT KIT			
ITEM #	QTY.	PART #	DESCRIPTION
1	2	BLT38X1NC	3/8X1 BOLT
2	2	NUT38LOCKNC	3/8" LOCK NUT
3	1	VM800469	GEARBOX SHIFT BRACKET
4	1	VM800470	SHIFT HANDLE BRACKET
5	1	VM800471	SHIFT HANDLE
6	2	WSH38FLAT	3/8" FLAT WASHER

NOTE: THESE SHIFT KITS ARE USED FOR TWO SPEED GEARBOXES VM800465 & VM800466.

VM900382 2 SPEED REMOTE SHIFTER KIT			
ITEM #	QTY.	PART #	DESCRIPTION
1	1	BLT14X112NC	1/4X1-1/2 BOLT
2	2	BLT38X1NC	3/8X1 BOLT
3	2	NUT14NC	1/4" NUT
4	2	NUT38LOCKNC	3/8" LOCK NUT
5	1	VM100687	11' SHIFT CABLE
6	1	VM800302	REMOTE SHIFT LEVER ASSEMBLY
7	1	VM800472	SHIFT CABLE BRACKET
8	1	VM800473	SHIFT CABLE BUSHING
9	1	VM800474	SHIFT CABLE BALL JOINT

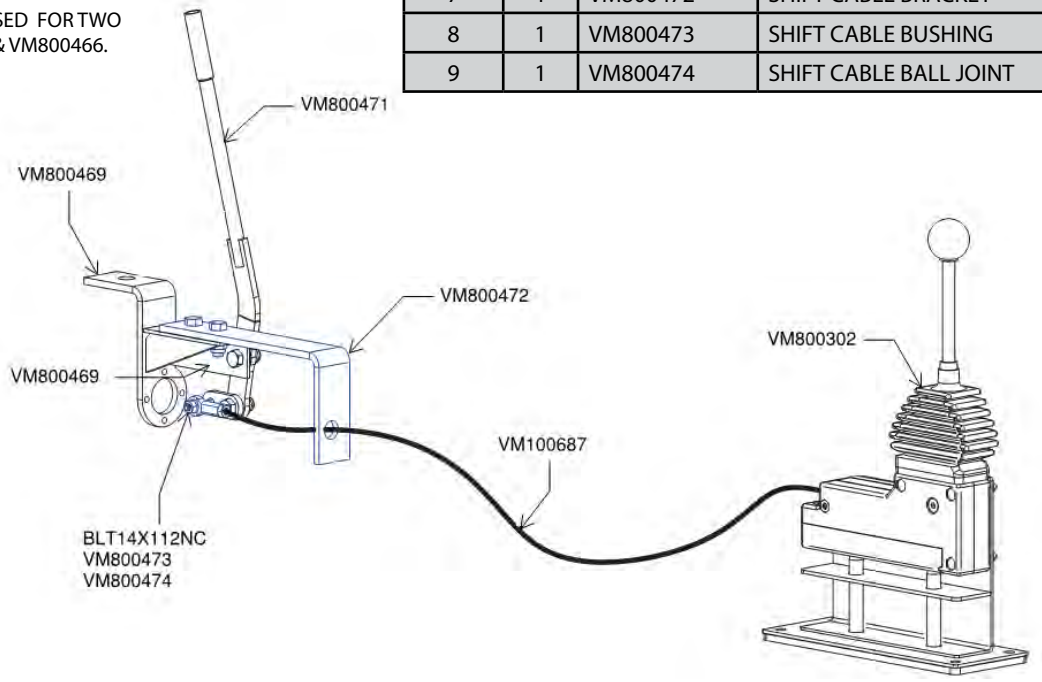

PTO/MIXER REFERENCE CHART

MODEL	3640	3645	3650	3655	3670	3675	3680	3680HD	3690	36100	36125
WITHOUT 2 SPEED											
PTO SHAFT	VM900199	VM900199	VM900136	VM900136	VM900136	VM900137 VM900138	VM900137 VM900138	VM900137 VM900138	VM900137 VM900138	VM900137 VM900138	VM900137 VM900138
FR DRIVE SHAFT	VM800077	VM800077	VM800077	VM800077	VM800077	VM800077	VM800077	VM800077	VM800077	VM800077	VM800077
RR DRIVE SHAFT	NA	NA	NA	NA	VM800089	VM800089	VM800089	VM800089	VM800089	VM800089	VM800089
WITH 2 SPEED											
PTO SHAFT	VM900199	VM900199	VM900136	VM900136	VM900136	VM900137 VM900138	VM900137 VM900138	VM900137 VM900138	VM900137 VM900138	VM900137 VM900138	VM900137 VM900138
FR DRIVE SHAFT	VM800075	VM800075	VM800075	VM800075	VM800075	VM800075	VM800075	VM800075	VM800332	VM800332	VM800332
RR DRIVE SHAFT	NA	NA	NA	NA	VM800089	VM800089	VM800089	VM800089	VM800089	VM800089	VM800089
PLANETARY GEARBOX ASSEMBLY	VM800080	VM800080	VM800080	VM800080	VM800080	VM800081	VM800081	VM800081	VM800081	VM800081	VM800379
1.3:1 GEARBOX	VM800464	VM800464	VM800464	VM800464	VM800464	VM800464	VM800464	VM800465	VM800465	VM800465	VM800465

NOTE: UNIT WITH SERIAL #021390
UTILIZES VM800305 2 SPEED GEARBOX

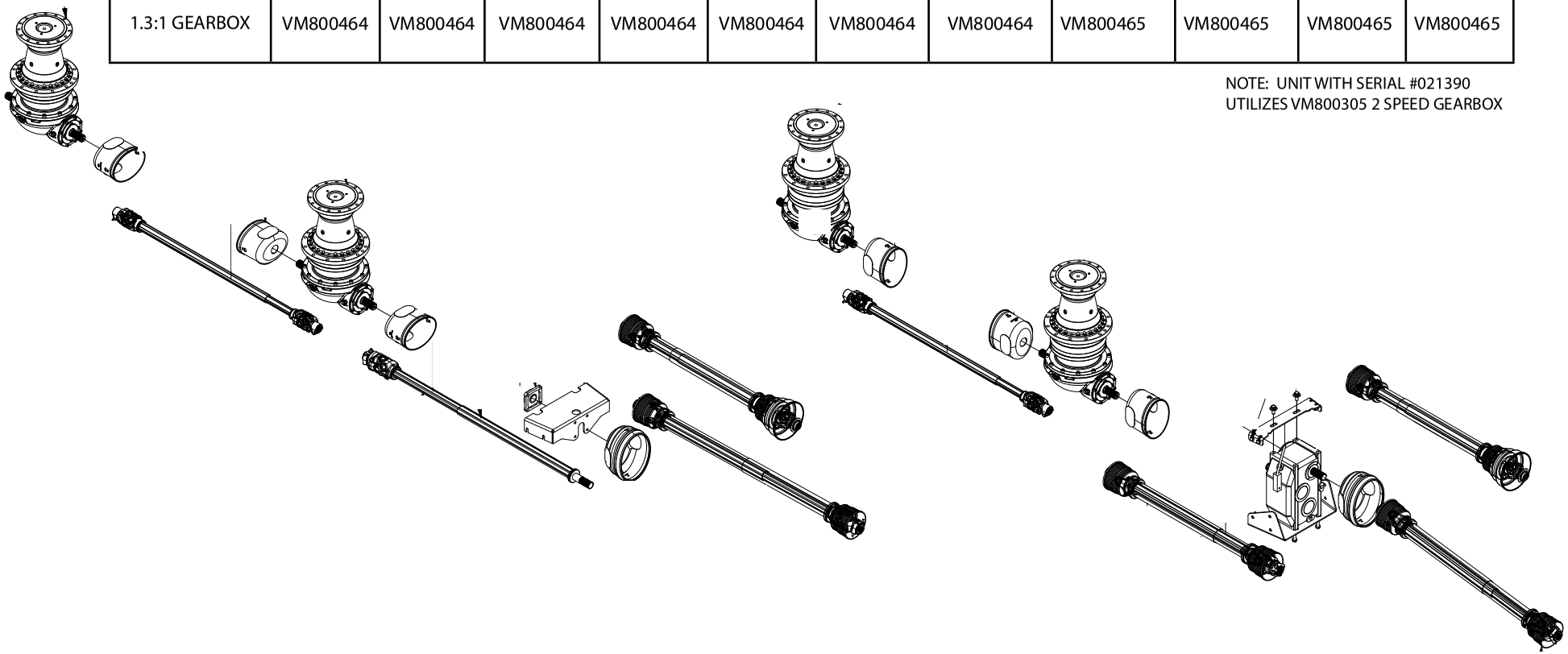

PTO SHAFTS

VM900199 35R 540 PTO 6SPLINE

ITEM #	QTY.	PART #	DESCRIPTION
1	1	MON800563	35R CV PTO 40.63
2	1	PTO351412403	35R 20SP CLAMP
3	1	PTO868101008	6SP A-LOCK YOKE

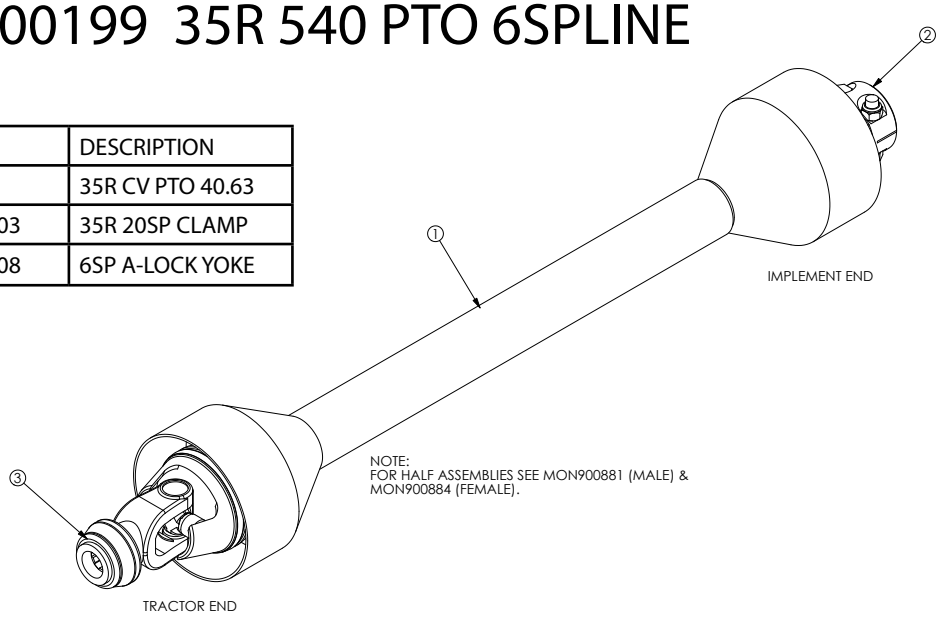

VM900136 55E 540 PTO 6SPLINE

ITEM #	QTY.	PART #	DESCRIPTION
1	1	PTO68810-1004	55E 6SP CV YOKE
2	1	VM800049	55E CV PTO

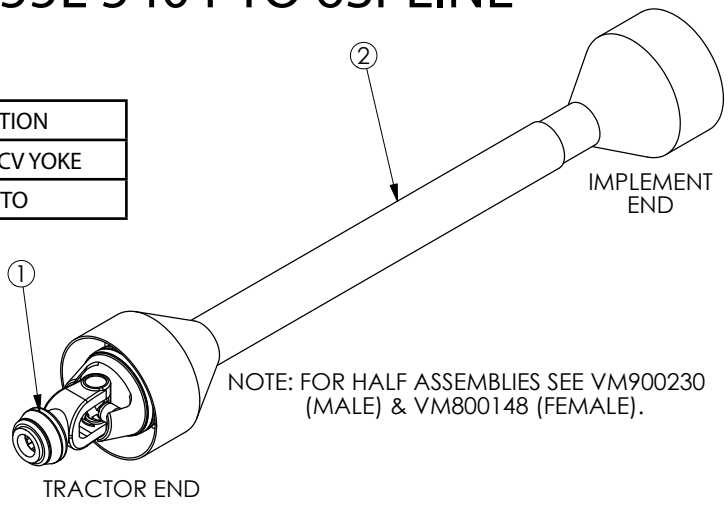

VM900137 55E 1000 PTO 1.38

ITEM #	QTY.	PART #	DESCRIPTION
1	1	PTO68810-1003	55E 21SP YOKE
2	1	VM800049	55E CV PTO

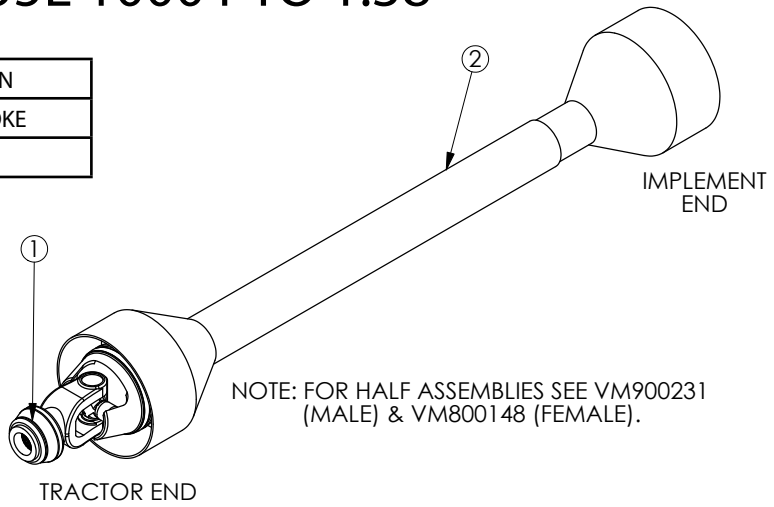

VM900138 55E 1000 PTO 1.75

ITEM #	QTY.	PART #	DESCRIPTION
1	1	PTO68810-1005	55E 20SP CAT 6 YOKE
2	1	VM800049	55E CV PTO

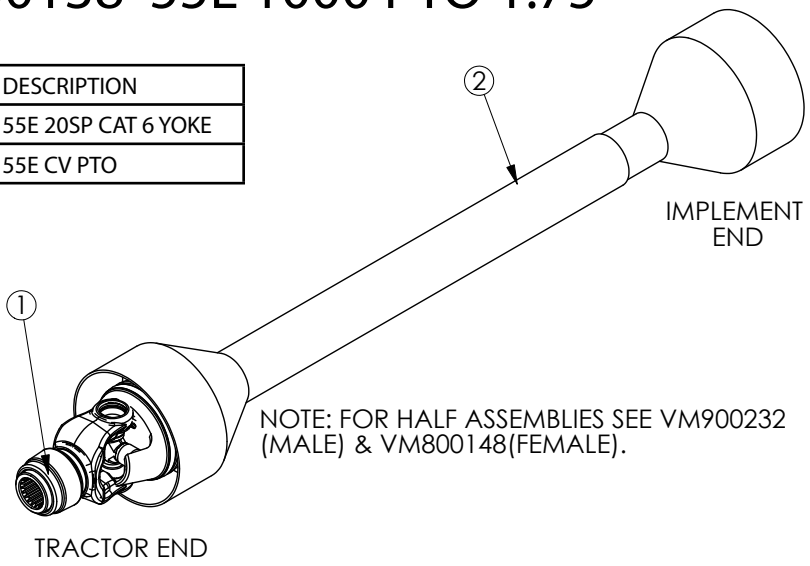

VM800049 55E 1000 PTO 1.75 CV

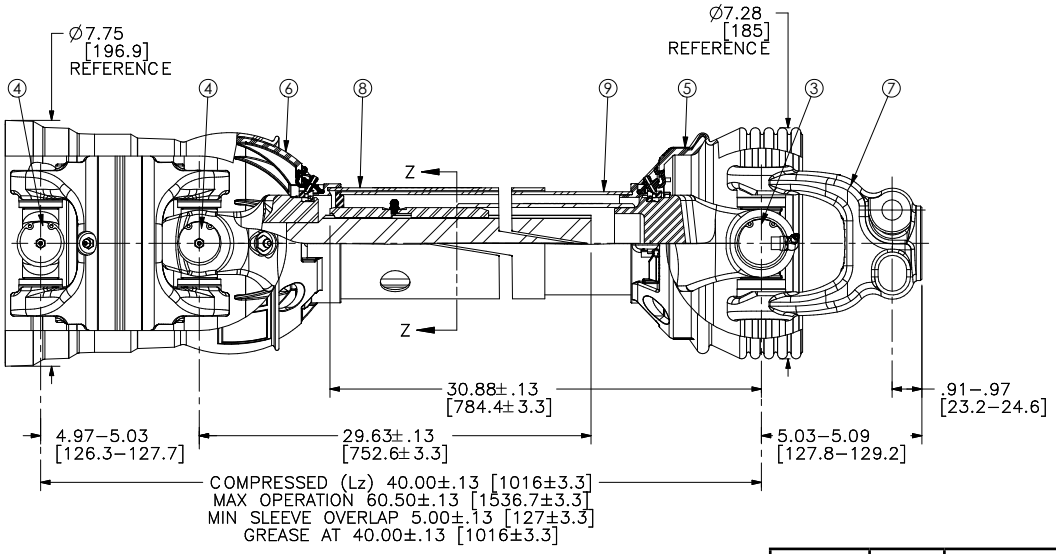

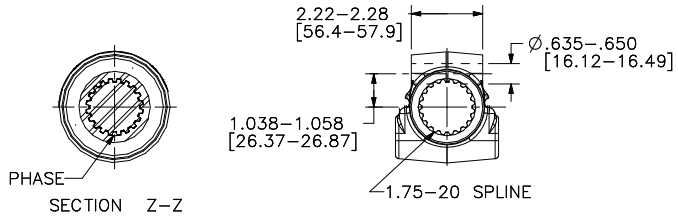

ITEM #	QTY.	PART #	DESCRIPTION
1	1	BLT58X3NCG8	5/8X3 GR8 BOLT
2	1	NUT58LOCKNC	5/8" LOCK NUT
3	1	PTO0315307	55E 1.53 CROSS KIT
4	2	PTO0315570	1.53 CV CROSS KIT
5	1	PTO9625762	INNER PTO GUARD
6	1	PTO9725762	OUTER PTO GUARD
7	1	PTO550531009	1.75 20SP YOKE
8	1	VM800147	FRONT PTO HALF
9	1	VM800148	REAR PTO HALF

VM800075 PTO SHAFT

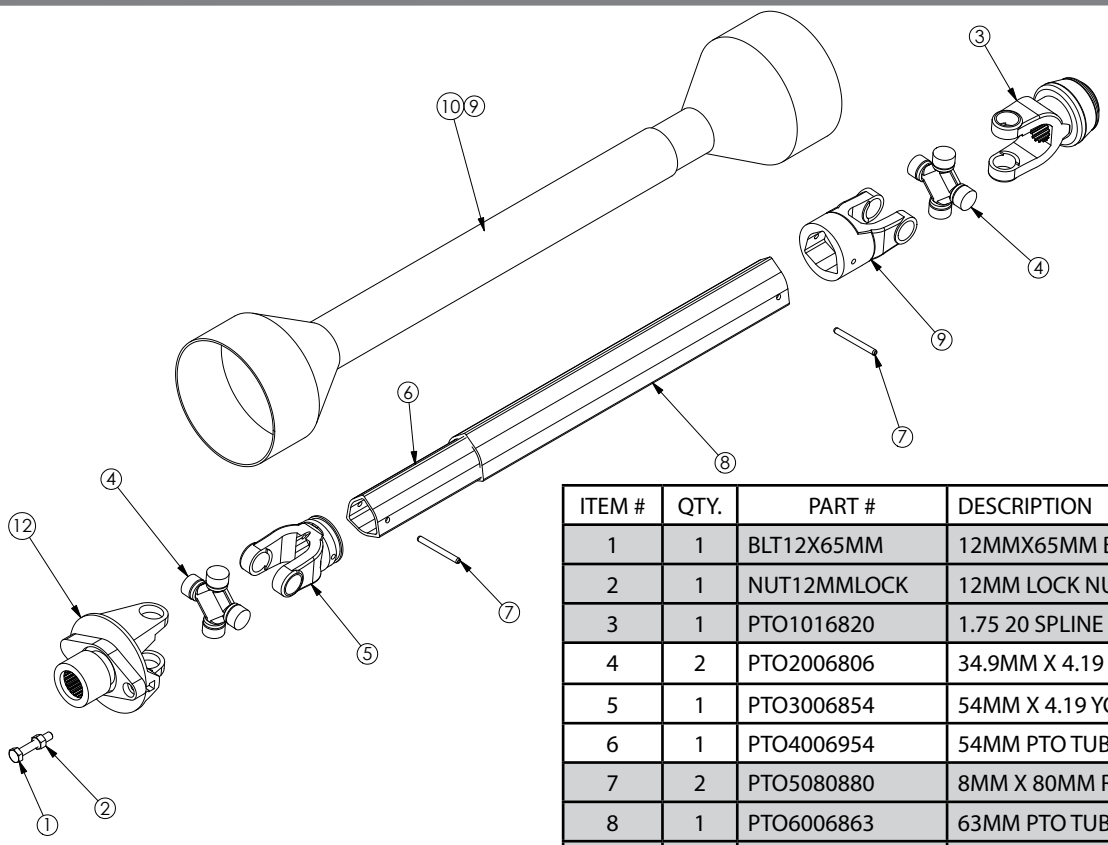

ITEM #	QTY.	PART #	DESCRIPTION
1	1	BLT12X65MM	12MMX65MM BOLT
2	1	NUT12MMLOCK	12MM LOCK NUT
3	1	PTO1016820	1.75 20 SPLINE 34.9MM YOKE
4	2	PTO2006806	34.9MM X 4.19 CROSS
5	1	PTO3006854	54MM X 4.19 YOKE
6	1	PTO4006954	54MM PTO TUBE
7	2	PTO5080880	8MM X 80MM ROLL PIN
8	1	PTO6006863	63MM PTO TUBE
9	1	PTO7006863	63MM X 34.9MM YOKE
10	1	PTO9004560	PTO SHIELD
11	2	PTO9614589	PTO SHIELD BEARING
12	1	VM800078	SHEAR YOKE

MON800563 35R CV 40.63 LESS END

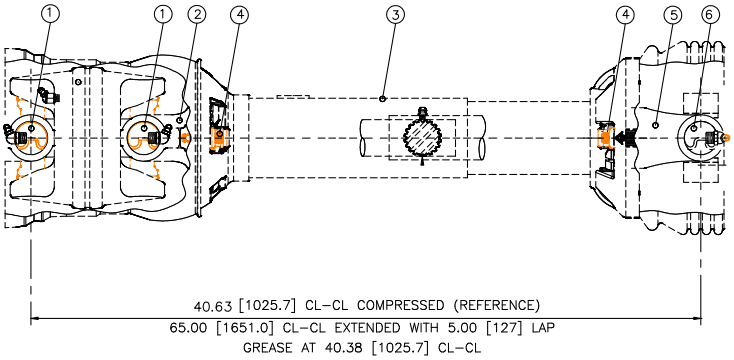

ITEM #	QTY.	PART #	DESCRIPTION
1	2	PTO0315450	35 CV CROSS
2	1	MON800565	35R YOKE
3	1	PTO9121458	CV SHIELD
4	1	PTO1915126	SHIELD BEARING
5	1	MON800468	YOKE TUBE
6	1	PTO22275	1.25 CROSS KIT
7	1	MON800564	FRONT PTO HALF
8	1	MON800474	REAR PTO HALF

VM800077 FRONT DRIVE SHAFT

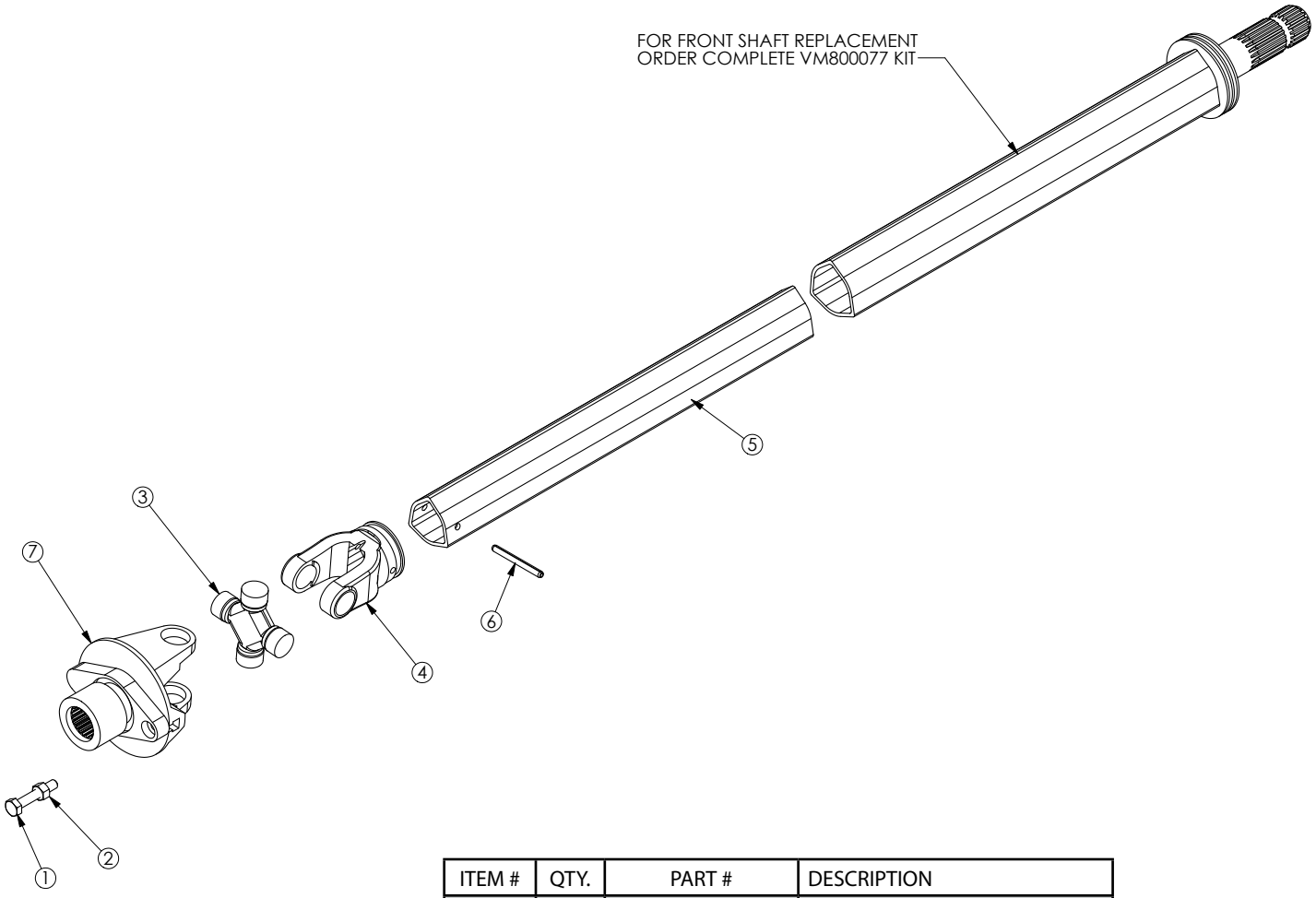

ITEM #	QTY.	PART #	DESCRIPTION
1	1	BLT12X65MM	12MMX65MM BOLT
2	1	NUT12MMLOCK	12MM LOCK NUT
3	2	PTO2006806	34.9MM X 4.19 CROSS
4	1	PTO3006854	54MM X 4.19 YOKE
5	1	PTO4006954	54MM PTO TUBE
6	2	PTO5080880	8MM X 80MM ROLL PIN
7	1	VM800078	SHEAR YOKE

VM800089 REAR DRIVE SHAFT

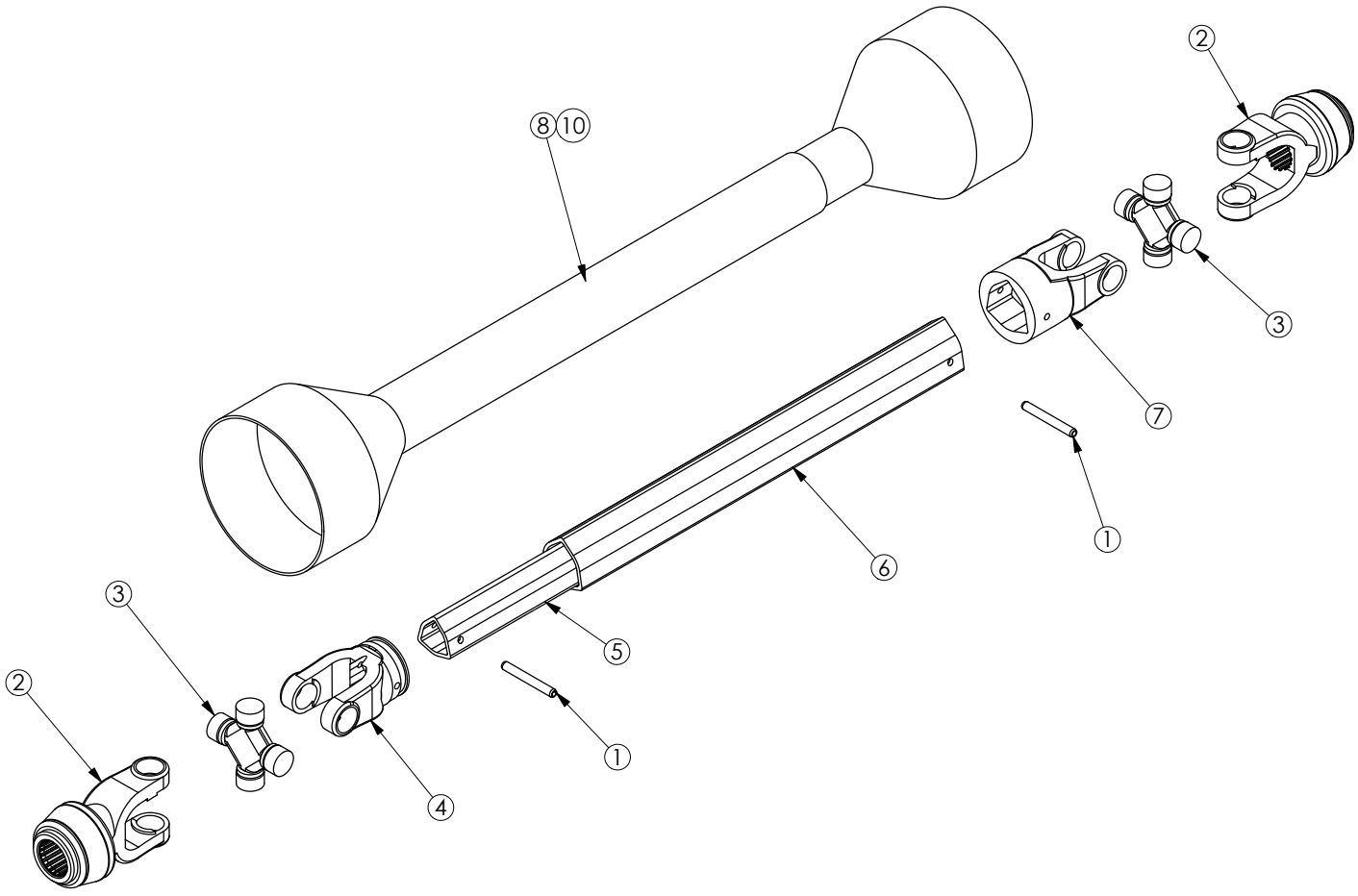

ITEM #	QTY.	PART #	DESCRIPTION
1	2	PTO020617	10MM X 80MM ROLL PIN
2	2	PTO1016820	1.75 20 SPLINE 34.9MM YOKE
3	2	PTO2008692	30.2MM X 92MM CROSS
4	1	PTO3006645	45.2MM X 3.62 YOKE
5	1	PTO4006545	45MM PTO TUBE
6	1	PTO4006954	54MM PTO TUBE
7	1	PTO7006654	54.2MM X 30.2MM YOKE
8	1	PTO9023560	PTO SHIELD
9	2	PTO9613567	PTO SHIELD BEARING

VM800332 FRONT DRIVE SHAFT

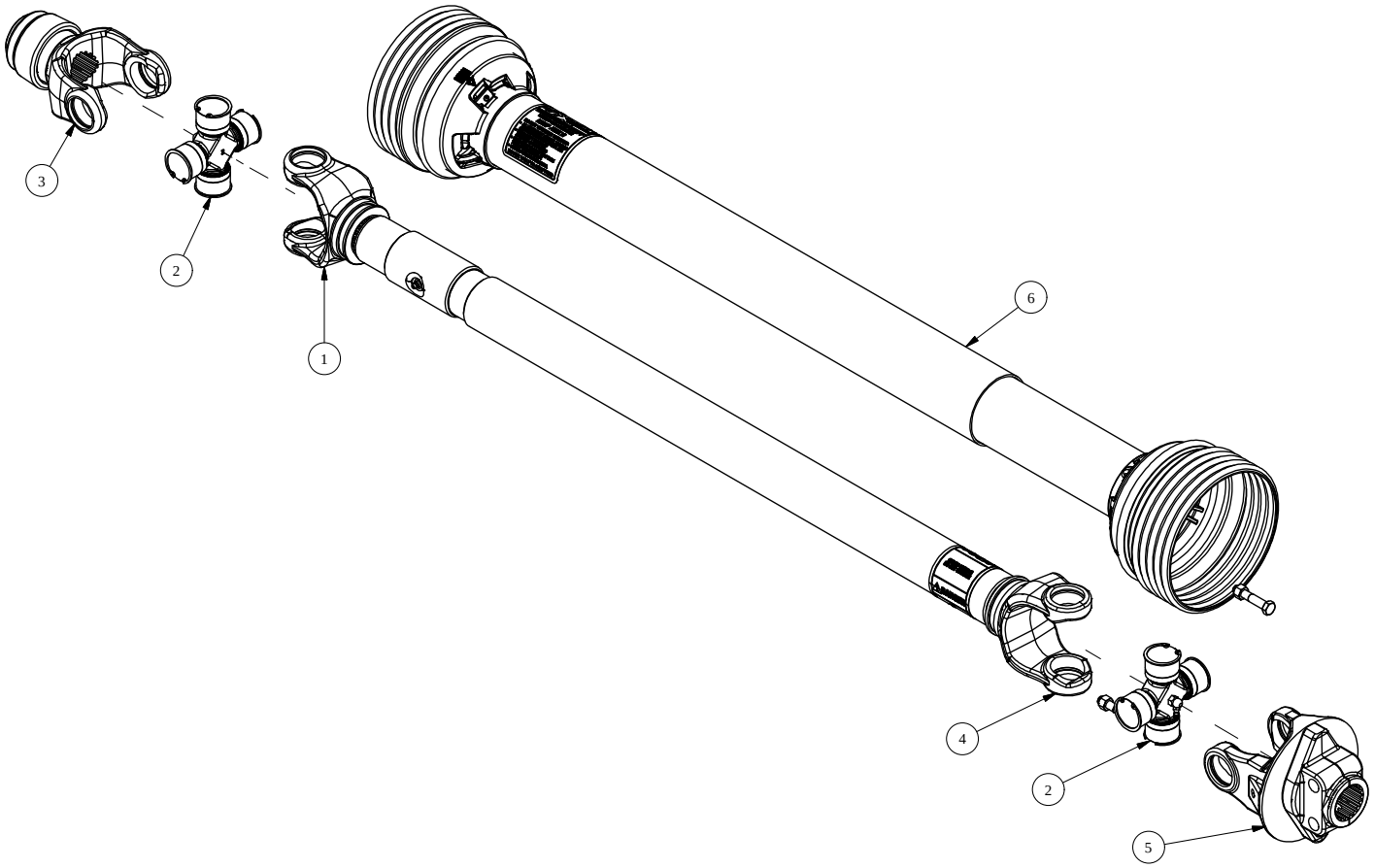

ITEM #	QTY.	PART #	DESCRIPTION
1	1	VM800337	1.75 20SP FRONT PTO HALF
2	2	PTO0315307	55E 1.53 CROSS KIT
3	1	PTO68810-1005	55E 20SP CAT 6 YOKE
4	1	VM800338	1.75 20SP REAR PTO HALF
5	1	VM800339	55E 20SP SHEAR YOKE
6	1	VM800475	CAT 6 DRIVESHAFT SHIELD
7	1	BLT716X214NC	7/16X2-1/4 HEX BOLT
8	1	NUT716LOCKNC	7/16" LOCK NUT

VM800199 HD WALKING BEAM ASSEMBLY

ITEM #	PART #	DESCRIPTION
1	VM800145	445/50-22.5 TIRE ASSEMBLY
2	VM800189	275/70-22.5 TIRE ASSEMBLY

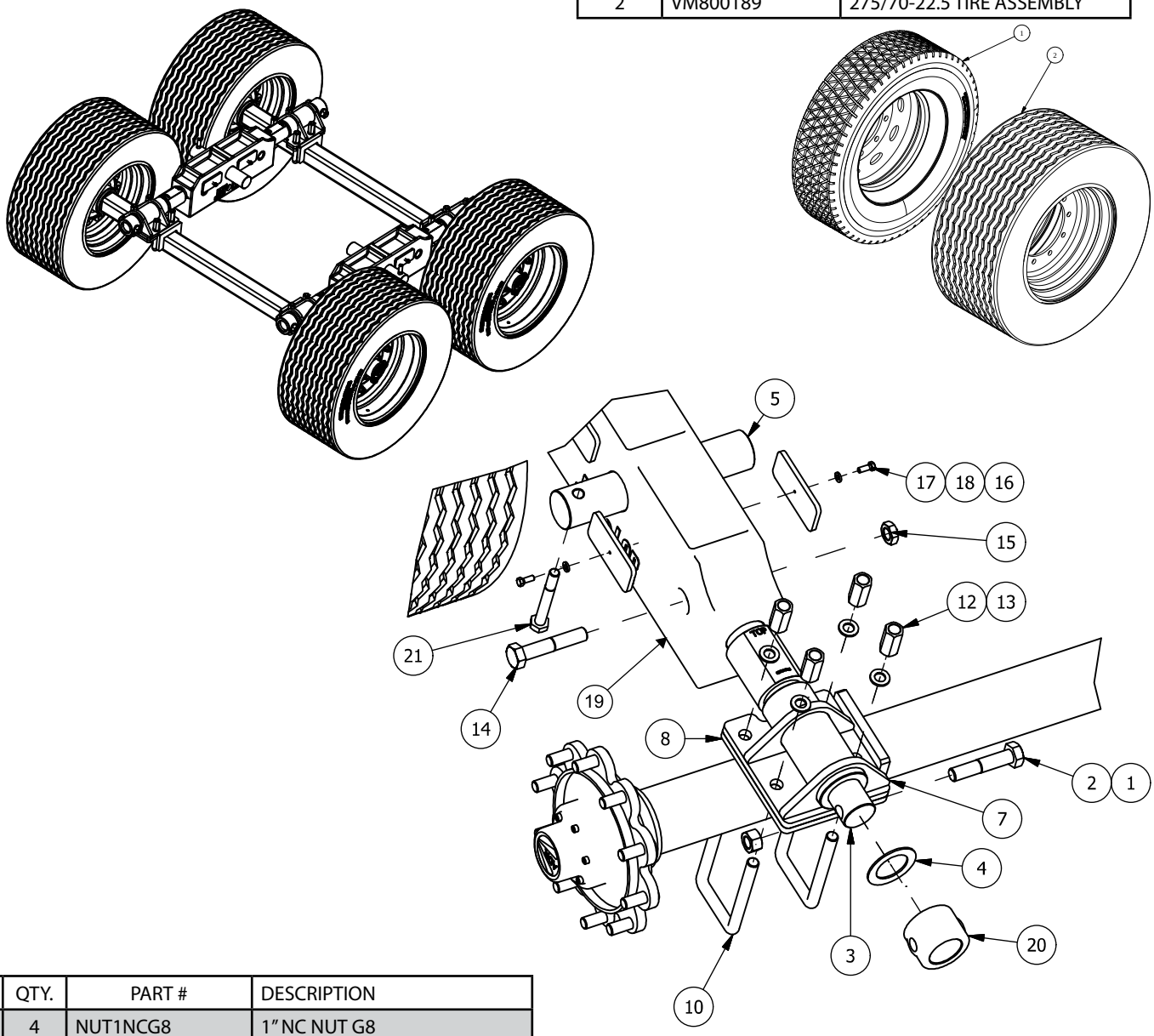

ITEM #	QTY.	PART #	DESCRIPTION
1	4	NUT1NCG8	1" NC NUT G8
2	4	BLT1X5NCG8	1X5 NC BOLT G8
3	4	SCA9690259	WEIGH BAR
4	4	VM800191	NYLON SPACER
5	2	VM800344	HINGE PIN
6	4	VM800145	TIRE ASSEMBLY
7	4	VM800194	AXLE WEIGHBAR BRACKET
8	4	VM800195	AXLE BRACKET
9	2	VM800105	AXLE
10	8	VM800456	U-BOLT
11	4	VM800197	BRACE PLATE
12	16	NUTCOUP78212NF	7/8" COUPLING NUT

ITEM #	QTY.	PART #	DESCRIPTION
13	16	WSH78FLATG8	7/8" FLAT WASHER G8
14	4	BLT1X512NCG8	1X5-1/2 BOLT NC G8
15	4	NUT1JAMNCG8	1" NC JAM NUT G8
16	8	VM800198	NYLATRON SPACER
17	8	BLT38X1NC	3/8X1 BOLT
18	8	WSH38LOCK	3/8" LOCK WASHER
19	2	VM800345	WALKING BEAM
20	4	VM800295	LOCKING SLEEVE
21	2	BLT34X6NCG8	3/4X6 NC G8 BOLT

TIRE SPECIFICATIONS

TIRE & RIM ASSEMBLY PART #	TIRE SIZE	LOAD RATING	MAX AIR PRESSURE
VM800226	245/70R19.5 PER TIRE IN DUAL CONFIGURATION	5,800 LBS AT 25 MPH 2,628 KG AT 40 KM/H	130 PSI 8.96 BAR, 896 KPA
VM800189	275/70R22.5 PER TIRE IN DUAL CONFIGURATION	7,159 LBS AT 25 MPH 3,250 KG AT 40 KM/H	130 PSI 8.96 BAR, 896 KPA
VM800159	15.0/55-17 PER TIRE	9,350 LBS AT 18 MPH 4,240 KG AT 30 KM/H	87 PSI 6 BAR, 600 KPA
VM800290	435/50R19.5 PER TIRE	11,100 LBS AT 25 MPH 5,040 KG AT 40 KM/H	130 PSI 8.96 BAR, 896 KPA
VM800145	445/50R22.5 PER TIRE	11,410 LBS AT 25 MPH 5,180 KG AT 40 KM/H	130 PSI 8.96 BAR, 896 KPA

AXLES AND MOUNTING HARDWARE

ITEM #	PART #	DESCRIPTION
1	VM800291	2.645 ID OSCILLATING AXLE
2	NUT1NCG8	1" NC G8 NUT
3	VM800295	2.645 WEIGHBAR LOCK TUBE
4	BLT1X5NCG8	1X5 NC G8 BOLT
5	VM800191	2.625 AXLE SPACER
6	VM800296	AXLE MOUNT
7	VM800297	2.895 WEIGH BAR TUBE
8	NUT34NCG8	3/4" NC G8 NUT
9	BLT34X212NCG8	3/4X2-1/2 NC G8 BOLT
10	BLT1X512NCG8	1X5-1/2 NC G8 BOLT

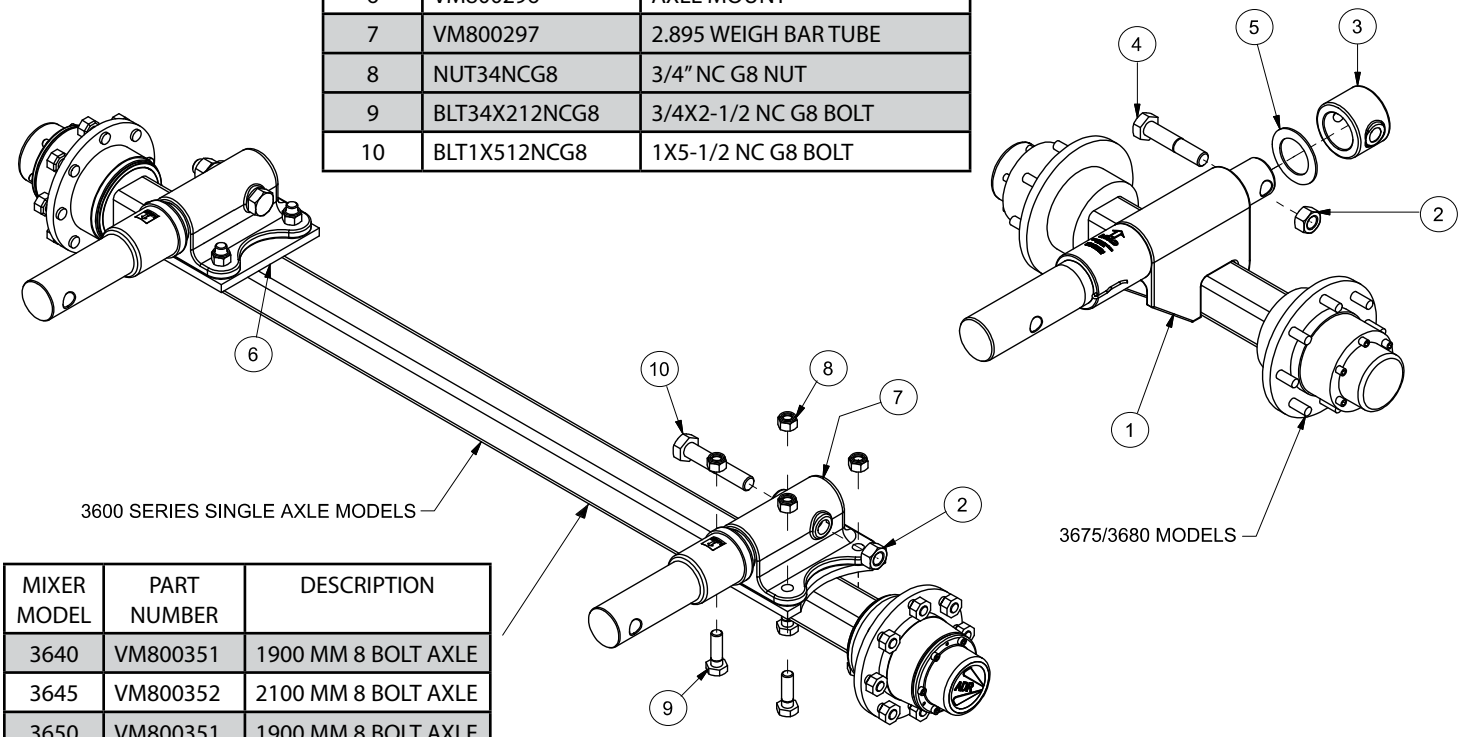

MIXER MODEL	PART NUMBER	DESCRIPTION
3640	VM800351	1900 MM 8 BOLT AXLE
3645	VM800352	2100 MM 8 BOLT AXLE
3650	VM800351	1900 MM 8 BOLT AXLE
3655	VM800352	2100 MM 8 BOLT AXLE

(REFER TO TABLE FOR PART NUMBER BY MODEL)

VM900332 SINGLE AXLE 10 BOLT UPGRADE

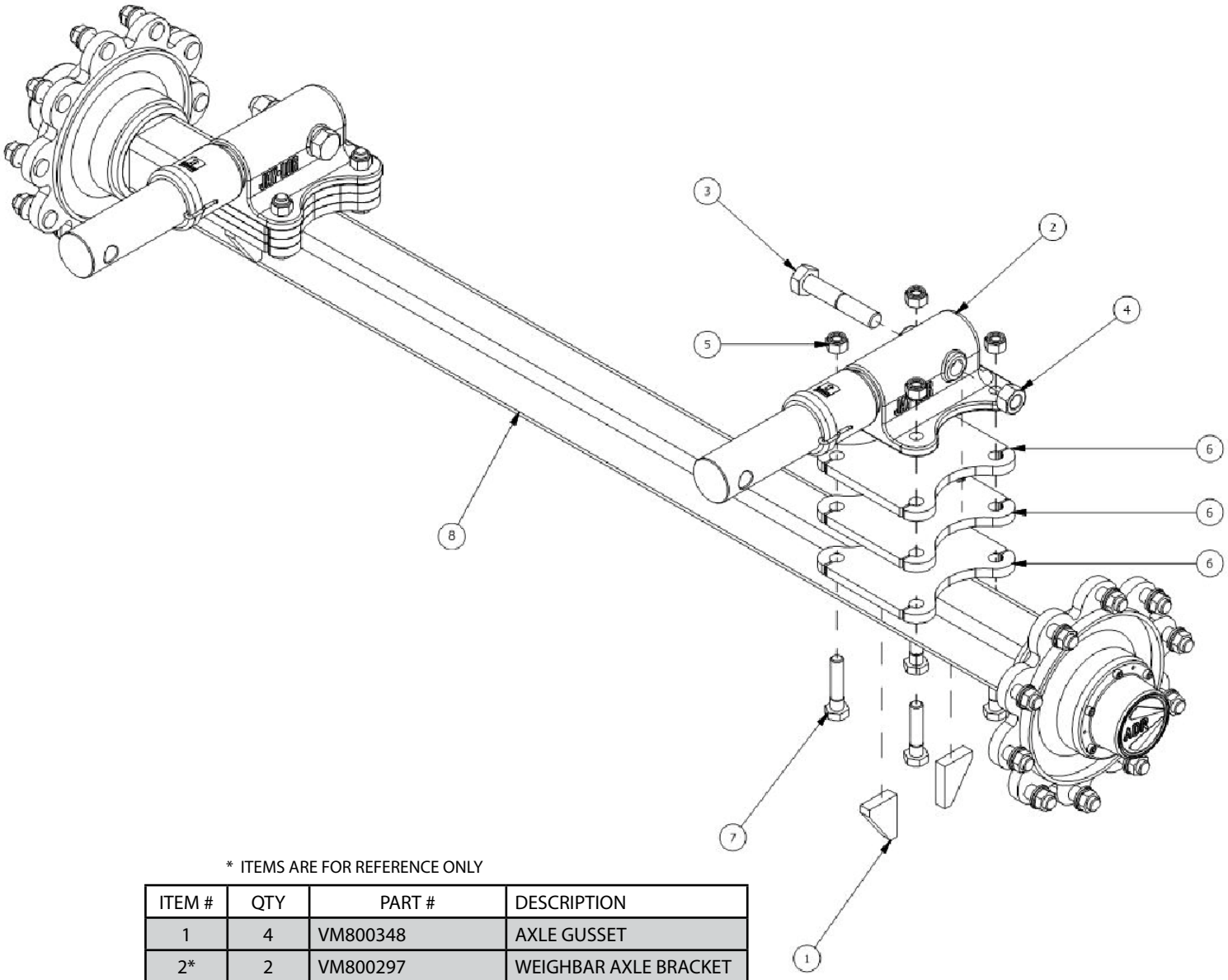

* ITEMS ARE FOR REFERENCE ONLY

ITEM #	QTY	PART #	DESCRIPTION
1	4	VM800348	AXLE GUSSET
2*	2	VM800297	WEIGHBAR AXLE BRACKET
3*	2	BLT1X512NCG8	1X5-1/2 NC G8 BOLT
4*	2	NUT1NCG8	1" NC G8 NUT
5	8	NUT34NYLOCKNC	3/4" NYLOCK NUT
6	6	VM800349	AXLE MOUNT
7	8	BLT34X312NCG8	3/4X3-1/2 NC G8 BOLT
8	1	VM800105	10 BOLT AXLE
9	-8	BLT34X212NCG8	3/4X2-1/2 NC G8 BOLT
10	-1	VM800351	8 BOLT SINGLE AXLE

VM900331 OSCILLATING TANDEM AXLE 10 BOLT UPGRADE

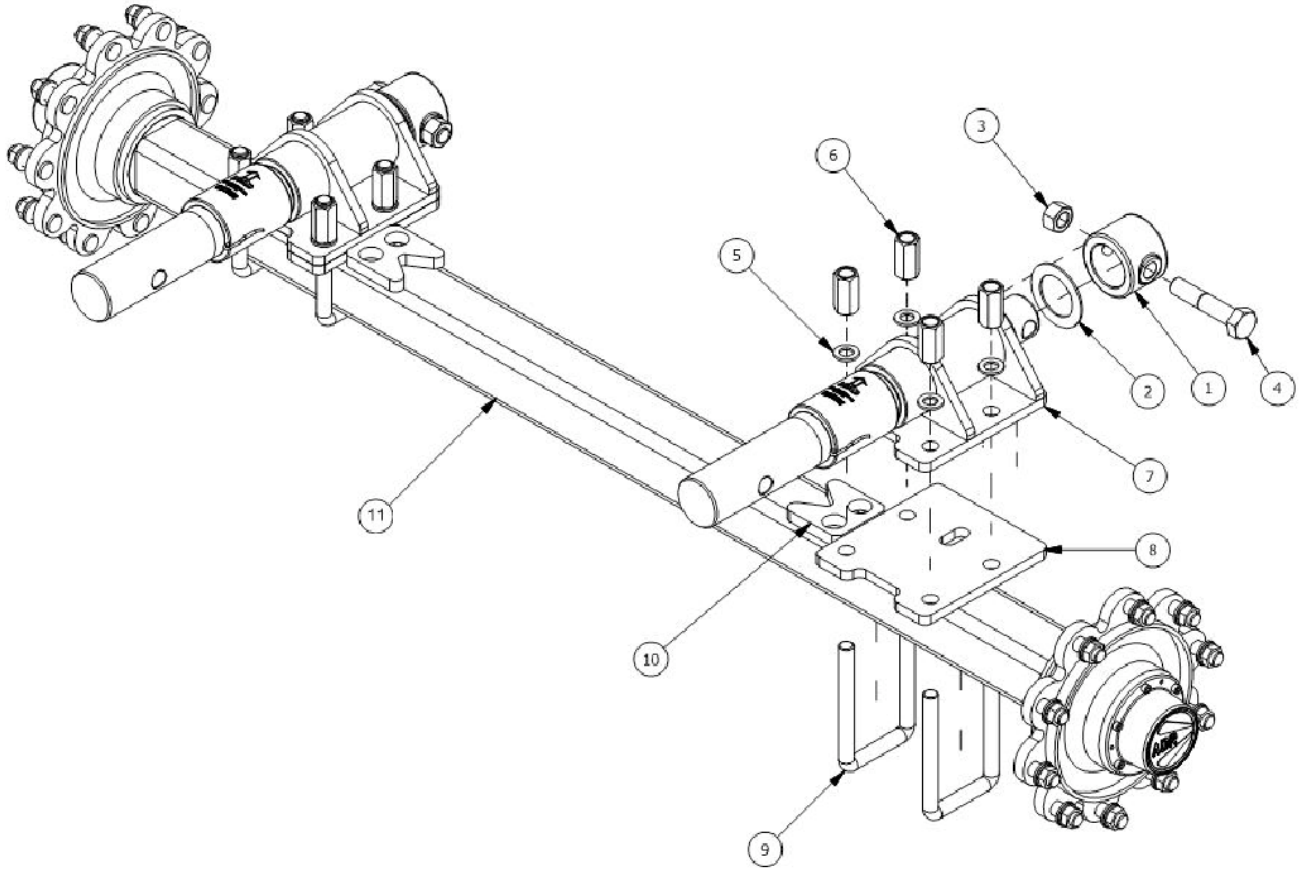

* ITEMS ARE FOR REFERENCE ONLY

ITEM #	QTY	PART #	DESCRIPTION
1*	2	VM800295	WEIGHBAR RETAINER
2*	2	VM800191	2.63 SPACER
3*	4	NUT1NCG8	1" NC G8 NUT
4*	2	BLT1X5NCG8`	1X5 NC G8 BOLT
5	8	WSH78FLAT	7/8" FLAT WASHER
6	8	NUTCOUP78X212NF	7/8X2-1/2 COUPLER NUT
7	2	VM800194	WEIGHBAR AXLE BRACKET
8	2	VM800195	AXLE BRACKET
9	4	VM800196	7/8" U-BOLT
10	2	VM800350	AXLE BRACE
11	1	VM800105	10 BOLT AXLE
12	-2	VM800291	OSCILLATING AXLE

VM800099 8 BOLT HUB ASSEMBLY

THIS HUB FOR MODELS:
3640, 3645, 3650, 3655,
3670 OSCILLATING,
3675 OSCILLATING,
& 3680 OSCILLATING.

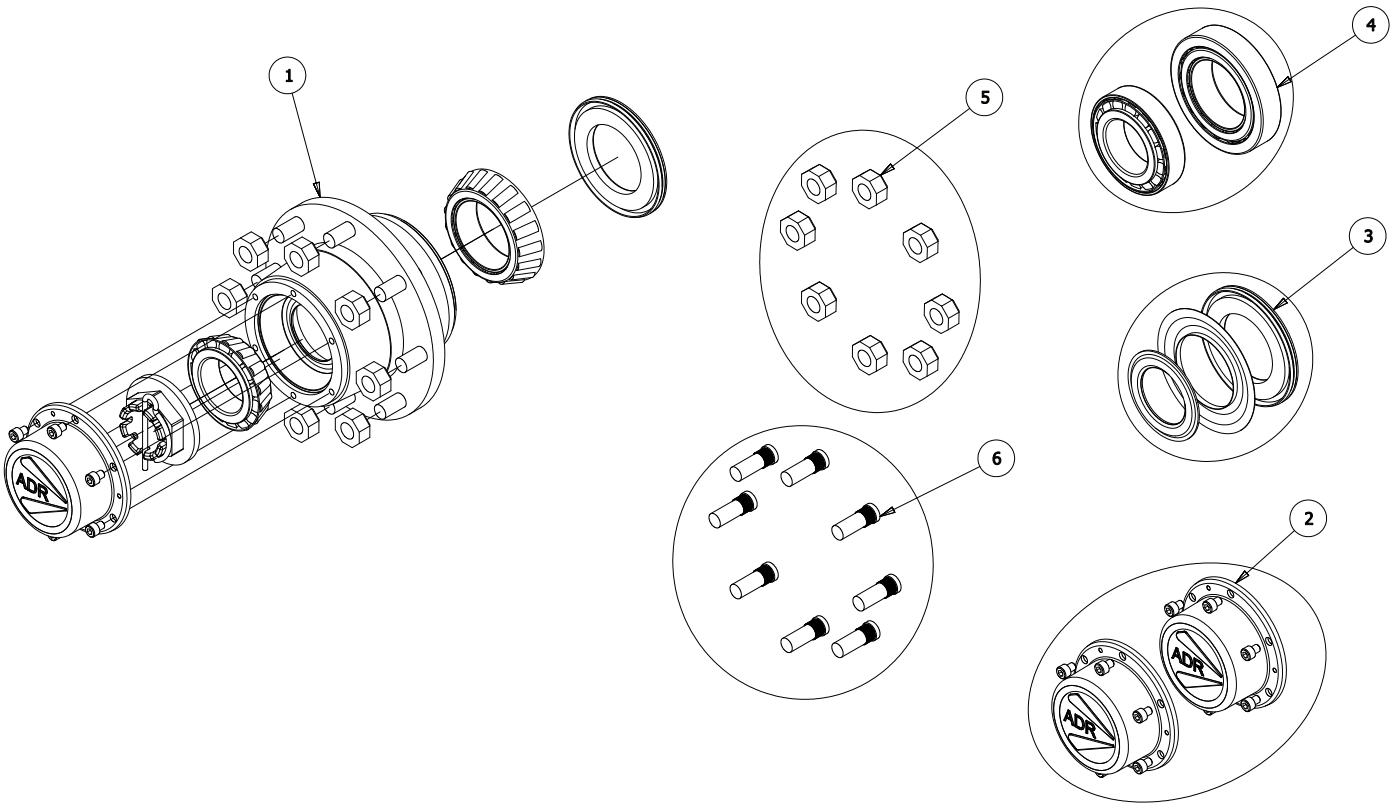

ITEM #	QTY.	PART #	DESCRIPTION
1	1	VM800099	HUB COMPLETE
2	1	VM800100	DUST CAP & SEAL KIT (2 OF EACH)
3	1	VM800101	GREASE SEAL KIT
4	1	VM800102	BEARING KIT (INCLUDES BOTH BEARINGS WITH RACES)
4A	1	TIM32215	BEARING & RACE (INNER)
4B	1	TIM33212	BEARING & RACE (OUTER)
5	1	VM800103	LUG NUT KIT (10 PIECES)
6	1	VM800104	WHEEL STUD KIT (10 PIECES)

VM800266 10 BOLT HD HUB ASSEMBLY

THIS HUB FOR MODEL 3690 &
SINGLE AXLE UPGRADE KIT VM800105

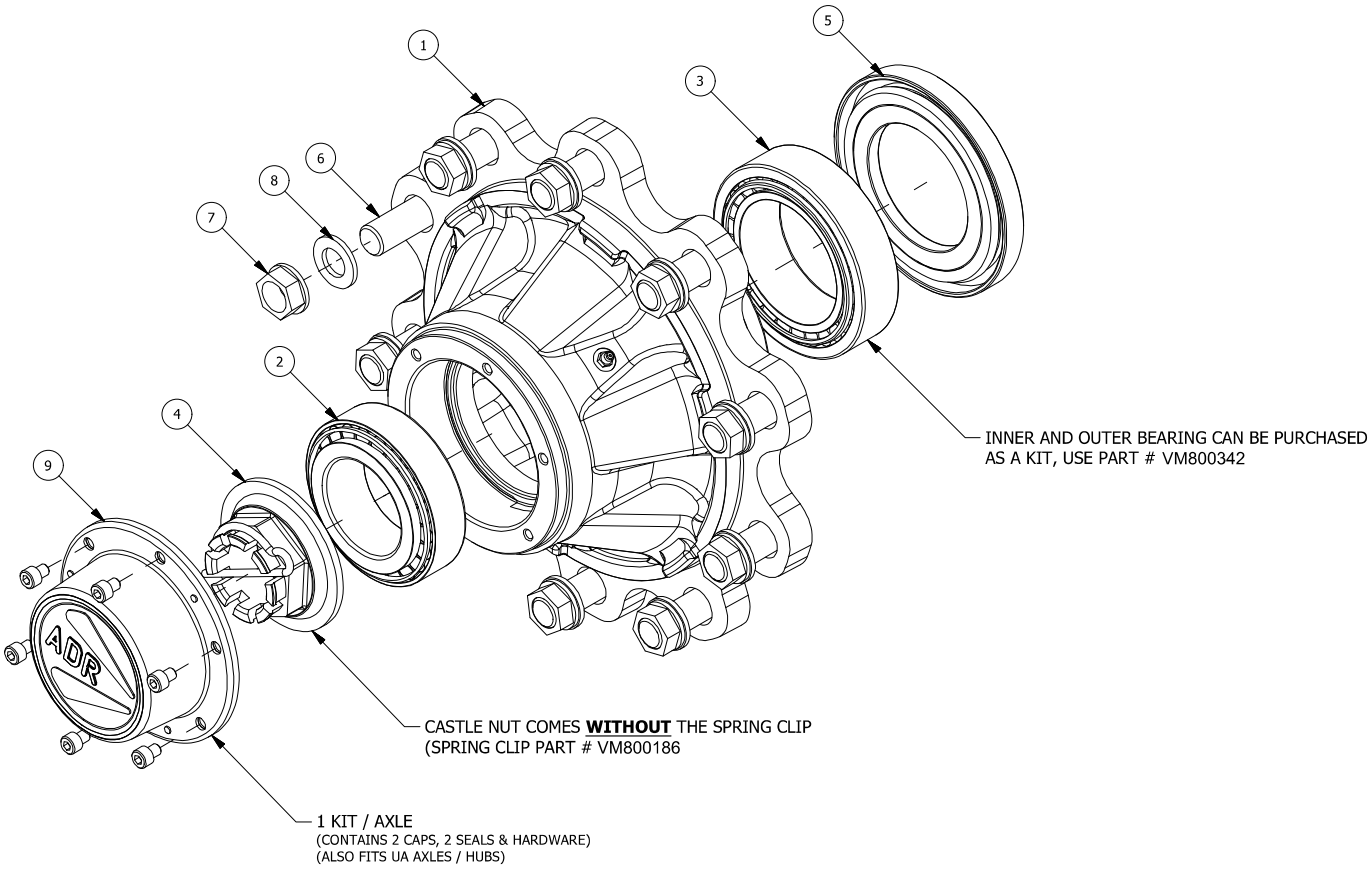

ITEM #	QTY.	PART #	DESCRIPTION
1	1	VM800271	140MM 10 BOLT HUB
2	1	TIM33114	OUTER BEARING
3	1	TIM33018	INNER BEARING
3A	1	VM800342	BEARING KIT (INCLUDES BOTH BEARINGS WITH RACES)
4	1	VM800108	CROWN NUT (NO CLIP)
4A	1	VM800186	SPRING CLIP
5	1	VM800272	GREASE SEAL
6	1	VM800111	STUD KIT
7	10	VM800112	LUG NUTS
8	10	VM800113	7/8" GRADE 8 FLAT WASHER
9	1	VM800107	DUST CAP KIT

VM800265 10 BOLT HD HUB ASSEMBLY

THIS HUB FOR MODELS: 36100 & 36125

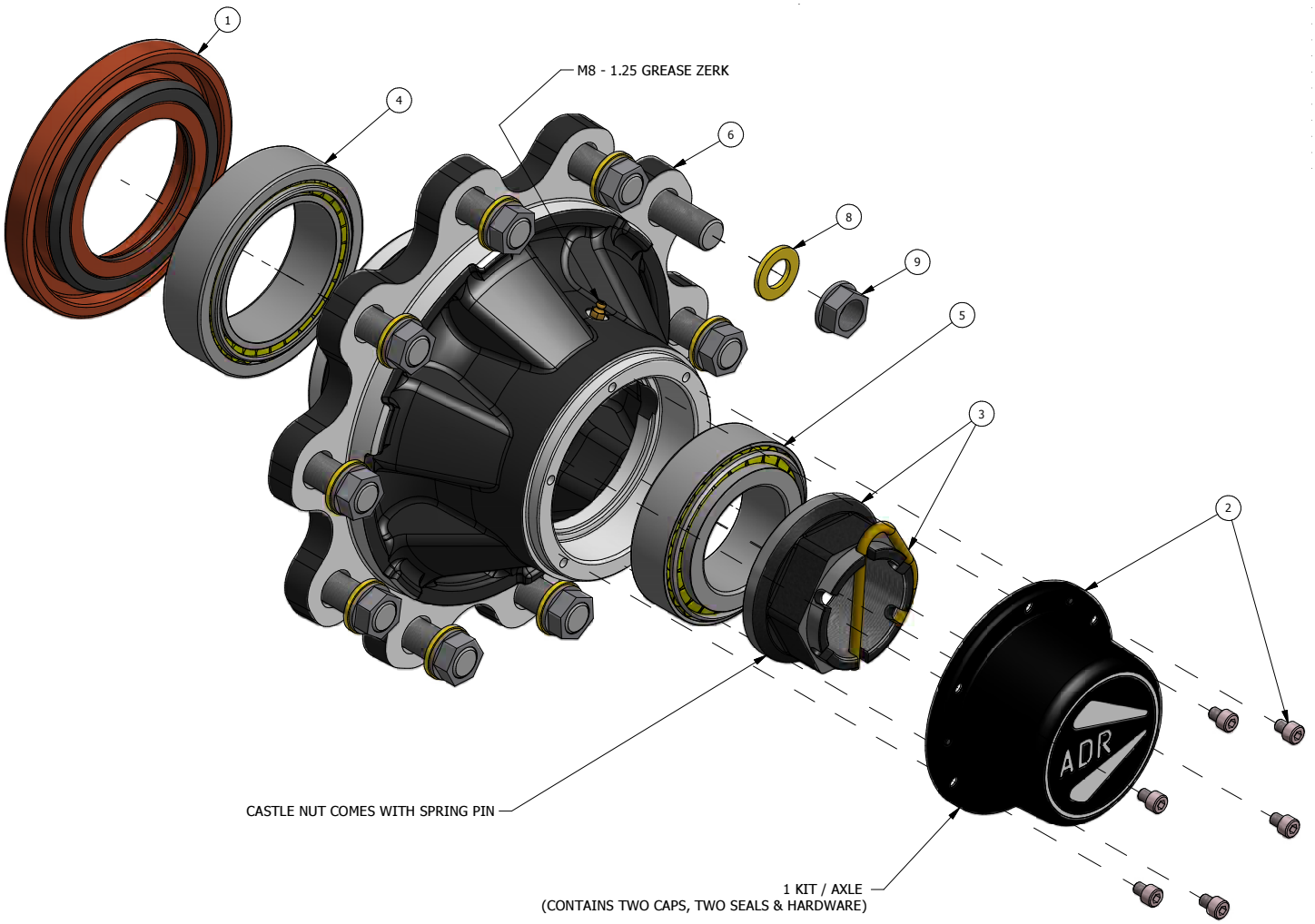

ITEM #	QTY.	PART #	DESCRIPTION
1	1	VM800267	GREASE SEAL
2	1	VM800268	DUST CAP KIT
3	1	VM800269	CROWN NUT W/ CLIP
4	1	TIM33020	INNER BEARING
5	1	TIM33215	OUTER BEARING
6	1	VM800270	150MM 10 BOLT HUB
7	1	VM800111	STUD KIT
8	10	VM800113	7/8" FLAT WASHER
9	10	VM800112	LUG NUTS

VM900196 REAR TAIL LIGHT ASSEMBLY

PART #	DESCRIPTION
VM900196-1	90" TAIL LIGHT KIT
VM900196-2	96" TAIL LIGHT KIT
VM900196-3	102" TAIL LIGHT KIT

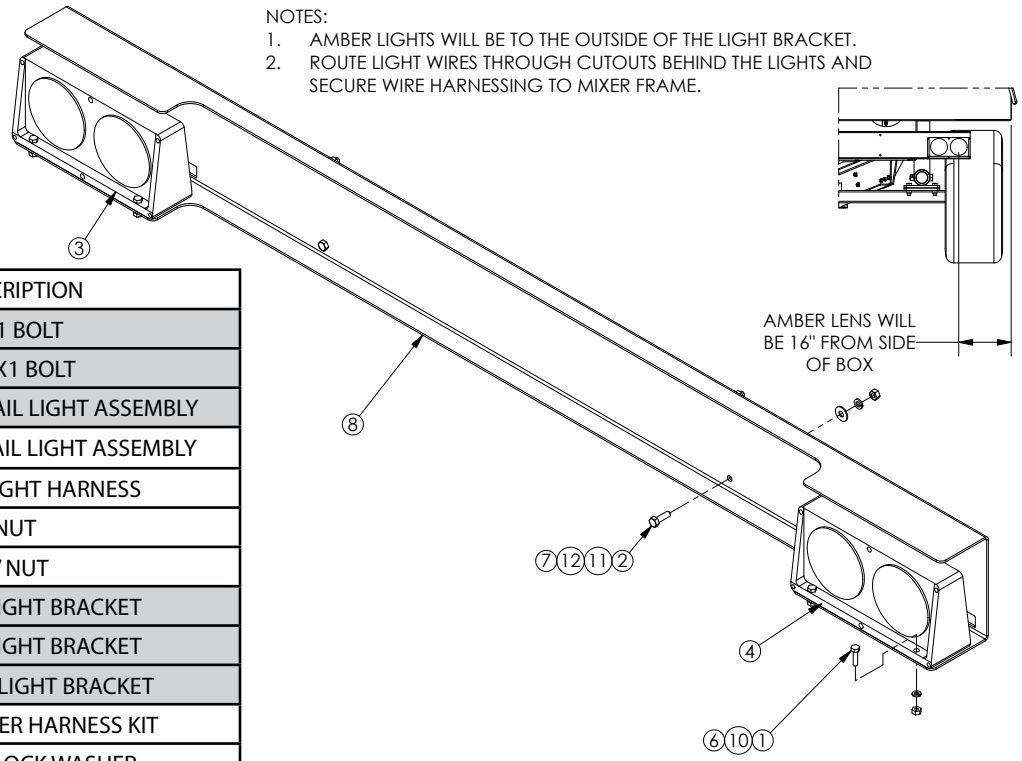

ITEM #	QTY.	PART #	DESCRIPTION
1	8	BLT14X1NC	1/4X1 BOLT
2	4	BLT516X1NC	5/16X1 BOLT
3	1	BLZ40762	RH TAIL LIGHT ASSEMBLY
4	1	BLZ40763	LH TAIL LIGHT ASSEMBLY
5	1	DM800275	15' LIGHT HARNESS
6	8	NUT14NC	1/4" NUT
7	4	NUT516NC	5/16" NUT
8	1	VM100914	90" LIGHT BRACKET
	1	VM100915	96" LIGHT BRACKET
	1	VM100916	102" LIGHT BRACKET
9	1	VM900197	POWER HARNESS KIT
10	8	WSH14LOCK	1/4" LOCK WASHER
11	4	WSH516FLAT	5/16" FLAT WASHER
12	6	WSH516LOCK	5/16" LOCK WASHER

SCALE KITS

VM900236-1,-2, VM900237-1,-2, VM900386-1,-2, VM900387-1,-2

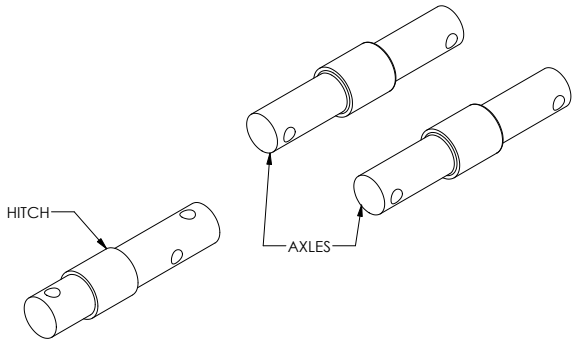

WEIGHBAR PART NUMBERS - UNITS N08647 AND UP		
MODEL	TYPE	PART#
SINGLE 3640/3645/3650/3655	HITCH	SCA9690120
	AXLE	SCA9690122
SINGLE AXLE TWIN AUGER & DUAL OSC TANDEM 3670/3675/3680	HITCH	SCA9690120
	AXLE	SCA9690121
HD WALKING BEAM 3680/3690/36100 36125	HITCH	SCA9690146
	AXLE	SCA9690121
SCALE HARDWARE KITS		
PART #	DESCRIPTION	
VM900386-1	DIGI-STAR 3 BAR SCALE KIT	
VM900386-2	DIGI-STAR 5 BAR SCALE KIT	
VM900387-1	DIGI-STAR 3 BAR SCALE KIT w/REMOTE	
VM900387-2	DIGI-STAR 5 BAR SCALE KIT w/REMOTE	

WEIGHBAR PART NUMBERS - UNITS PRIOR TO N08647		
MODEL	TYPE	PART#
SINGLE 3640/3645/3650/3655	HITCH	SCA9690257
	AXLE	SCA9690258
SINGLE AXLE TWIN AUGER & DUAL OSC TANDEM 3670/3675/3680	HITCH	SCA9690257
	AXLE	SCA9690259
HD WALKING BEAM 3680/3690/36100 36125	HITCH	SCA9690261
	AXLE	SCA9690259
SCALE HARDWARE KITS		
PART #	DESCRIPTION	
VM900236-1	DIGI-STAR 3 BAR SCALE KIT	
VM900236-2	DIGI-STAR 5BAR SCALE KIT	
VM900237-1	DIGI-STAR 3 BAR REMOTE SCALE KIT	
VM900237-2	DIGI-STAR 5 BAR REMOTE SCALE KIT	

VM900181 EXTENSION KITS

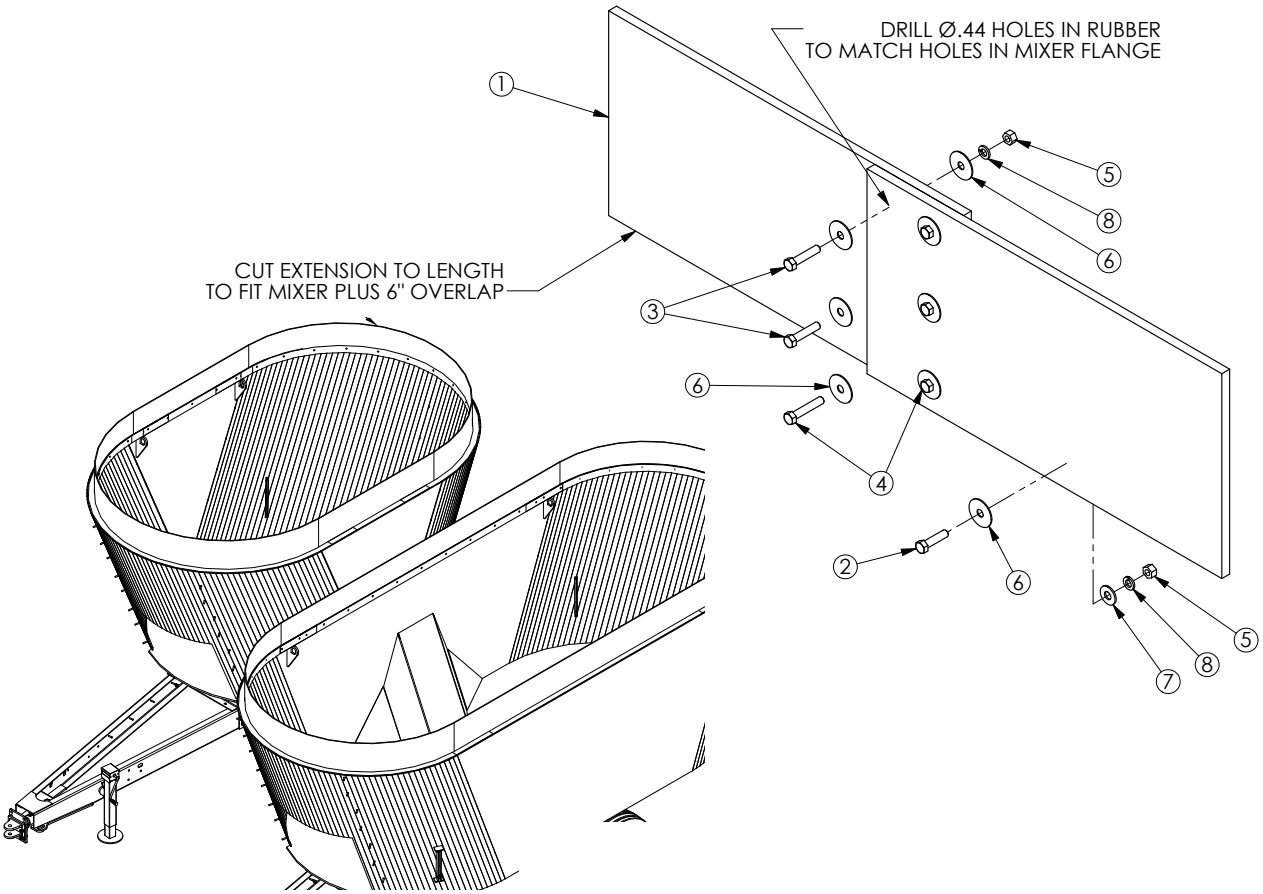

ITEM#	PART#	DESCRIPTION	VM900181-1 FITS: 3640	VM900181-2 QTY FITS: 3645 & 3650	VM900181-3 QTY FITS: 3655	VM900181-4 QTY FITS: 3675 & 3680	VM900181-5 QTY FITS: 3670 & 3690	VM900181-6 QTY FITS: 36100 & 36125	VM800181-7 FITS: 3640	VM900181-8 QTY FITS: 3645 & 3650	VM900181-9 QTY FITS: 3655	VM900181-10 QTY FITS: 3675 & 3680	VM900181-11 QTY FITS: 3670 & 3690	VM900181-12 QTY FITS: 36100 & 36125
1	BEL12X124PLY	12" BELTING	366	-	-	-	-	-	-					
			-	402	-	-	-	-	-	-	-	-	-	-
			-	-	420	-	-	-	-	-	-	-	-	-
			-	-	-	546	-	-	-	-	-	-	-	-
			-	-	-	-	600	-	-	-	-	-	-	-
			-	-	-	-	-	648	-	-	-	-	-	-
	MON800441	8" BELTING	-	-	-	-	-	-	366	-	-	-	-	-
			-	-	-	-	-	-	-	402	-	-	-	-
			-	-	-	-	-	-	-	-	420	-	-	-
			-	-	-	-	-	-	-	-	-	546	-	-
			-	-	-	-	-	-	-	-	-	-	600	
			-	-	-	-	-	-	-	-	-	-	-	648
2	BLT38X112NC	3/8X1-1/2 BOLT	29	32	34	44	49	53	29	32	34	44	49	53
3	BLT38X134NC	3/8X1-3/4 BOLT	4	4	4	4	4	4	2	2	2	2	2	2
4	BLT38X2NC	3/8X2 BOLT	2	2	2	2	2	2	2	2	2	2	2	2
5	NUT38NC	3/8" NUT	35	38	40	50	55	59	33	38	40	50	55	59
6	WSH38FENSS	3/8" FENDER WASHER	39	42	44	54	59	63	35	38	40	50	55	59
7	WSH38FLAT	3/8" FLAT WASHER	31	34	36	46	51	55	31	34	36	46	51	55
8	WSH38LOCK	3/8" LOCK WASHER	35	38	40	50	55	59	33	36	38	48	53	57

TRAILER SPECIFICATION CHART

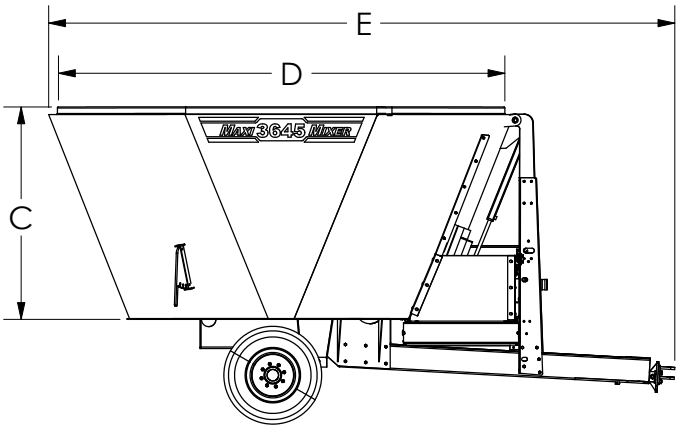

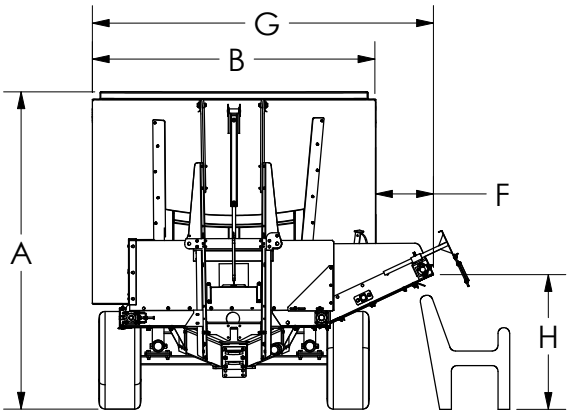

MODEL	3640	3645	3650	3655	3670	3675	3680	3690	36100	36125
CAPACITIES										
Capacity No Extension	350 ft³	375 ft³	450 ft³	475 ft³	615 ft³	650 ft³	650 ft³	800 ft³	925 ft³	1125 ft³
Capacity 8" Extension	380 ft³	410 ft³	485 ft³	515 ft³	675 ft³	700 ft³	700 ft³	865 ft³	990 ft³	1190 ft³
Capacity 12" Extension	405 ft³	440 ft³	515 ft³	545 ft³	720 ft³	740 ft³	740 ft³	910 ft³	1045 ft³	1245 ft³
Payload Capacity	10500 lbs	8800 lbs[3]	11700 lbs[3]	8250 lbs[3]	17000 lbs[1,2]	17600 lbs[1,2]	17300 lbs[1,2]	30000 lbs	35000 lbs	40000 lbs
Unit Weight	7500 lbs	8800 lbs	8900 lbs	9350 lbs	14500 lbs	14000 lbs	14300 lbs	19900 lbs	22000 lbs	22800 lbs
DIMENSIONS										
A- Overall Height	103"	93"[3]	108"[3]	106"[3]	98"[2]	107"[2]	107"[2]	116"	117"	135"
A- Overall Height w/ 8" extension	109"	99"[3]	114"[3]	112"[3]	104"[2]	113"[2]	113"[2]	122"	123"	141"
A- Overall Height w/12" extension	113"	103"[3]	118"[3]	116"[3]	108"[2]	117"[2]	117"[2]	126"	127"	145"
B- Drum Width	90"	102"	96"	102"	96"	90"	90"	96"	102"	102"
C- Tub Height	68"	59"	73"	72"	59"	68	68"	72"	73"	91"
D- Mixing Chamber Length	131"	143"	148"	150"	239"	222"	222"	244"	252"	252"
E- Overall Length	201"	212"	212"	216"	303"	290"	290"	308"	318"	318"
CONVEYOR HEIGHT/REACH	ALL CALCULATIONS USE 39" BUNK HEIGHT CLEARANCE									
H & F- 8' Flat Conveyor[2]	26"/5.5"	NA	26"	NA	26"	26"	26"	NA	NA	NA
H & F- 9' Flat Conveyor[2]	26"/12.5"	26"/3"	26"/9.5"	26"/3"	26"/9.5"	26"/5.5"	26"/5.5"	32"/9.5"	33"/3"	33"/3"
H & F- 6' Flat w/ 41" Lift Conveyor	46"/23"	46"/17"	46"/20"	46"/17"	46"/20"	46"/23"	46"/23"	46"/24"	46"/21"	46"/21"
H & F- 6' Flat w/ 60" Lift Conveyor	46"/43"	46"/37"	46"/40"	46"/37"	46"/40"	46"/43"	46"/43"	46"/43"	46"/41"	46"/41"
H & F- 6' Flat w/ 72" Lift Conveyor	46"/55"	46"/49"	46"/52"	46"/49"	46"/52"	46"/55"	46"/55"	46"/56"	46"/53"	46"/53"
TRANSPORT/OPERATING WIDTH										
G- 8' Flat Conveyor	97"	NA	97"	NA	97"	97"	97"	NA	NA	NA
G- 9' Flat Conveyor	108"	108"	108"	108"	108"	108"	108"	108"	108"	108"
G- 6' Flat w/ 41" Lift Conveyor	99"/120"	102"/117"	102"/117"	102"/117"	102"/117"	99"/120"	99"/120"	102"/117"	102"/117"	102"/117"
G- 6' Flat w/ 60" Lift Conveyor	109"/134"	115"/140"	112"/137"	115"/140"	112"/137"	109"/134"	109"/134"	112"/137"	115"/140"	115"/140"
G- 6' Flat w/ 72" Lift Conveyor	114"/146"	120"/152"	117"/149"	120"/152"	117"/149"	114"/146"	114"/146"	117"/149"	120"/152"	120"/152"
SPECIFICATIONS										
Floor Thickness	5/8"	5/8"	5/8"	5/8"	5/8"	5/8"	5/8"	3/4"	3/4"	3/4"
Number of Augers	1	1	1	1	2	2	2	2	2	2
Number of Optional Knives	5	7	7	7	14	10	10	14	14	14
PTO Speed	540 RPM	540 RPM	540 RPM	540 RPM	540 RPM	540 RPM	1000 RPM	1000 RPM	1000 RPM	1000 RPM
Minimum Horsepower Requirements	60 HP	70 HP	70 HP	80 HP	105 HP	115 HP	125 HP	135 HP	145 HP	170 HP
Standard Tires	15.0/55-17 26 Ply (2)				435/50 R19.5 (2)			445/50R22.5 (4)	275/70 R22.5 (8)	
Wheel Assembly	Single Straight Axle				Single Straight Axle			Walking Beam		

Note: We reserve the right to improve our products at any time. Specifications are subject to change at any time.

[1] Shown capacity at 5 mph, for higher speed or rough terrain applications payload is reduced.

[2] 15.0/55-17 26 ply oscillating tandems will increase payload capacity to 24000 lbs and reduce overall height by 4".

[3] Upgrade to 435/50 R19.5 tires and HD axle to increase payload to 18000 lbs and increase overall height by 4".

WARRANTY

SIOUX AUTOMATION CENTER, INC.(Hereafter noted as SAC) warrants to the original purchaser of a new SAC 3500 series vertical trailer mixer from an authorized SAC dealer that the product and the components therof manufactured by SAC are free from defects in material and workmanship at the time of shipment. SAC further warrants to such purchaser that each new SAC product will perform without structural or operational failure, if the product is assembled and mounted in accordance with SAC's instruction and drawing, and is then operated and maintained as described in the Owner's Manual.

WARRANTY PERIOD

The above warranty on materials and workmanship shall be effective for a period of 5 years on the mixer frame, 5 years pro-rated on the planetary gearbox, 3 years on the weighbars, and 1 year on all other components. The warranty period shall be effective from the date of delivery by the SAC dealer to the initial purchaser.

PURCHASER'S REMEDIES

If a warranted SAC product or component fails to conform to the above warranty during the warranty period, SAC will furnish the parts and labor at the factory or authorized dealer necessary to correct such failure, provided SAC is notified through the selling representative within 30 days of the discovery of the failure. All warranty submissions must include the original part in question, along with a properly filled out warranty claim sheet, before a warranty award will be made. Labor at the factory or dealer is specified as labor done at the SAC factory or SAC authorized dealer ONLY! SAC will pay the common carrier freight expense of parts to and from the owner. Faster freight service is available, with the owner paying the difference in cost between common carrier and preferred method by owner. Freight of whole goods to or from the factory is the owner's expense, regardless if they fail under warranty or not. All warranty decisions will be final!

EXCLUSIONS

This warranty shall not apply to component parts or accessories of products not manufactured by SAC and which carry the warranty of the manufacturer therof. Items of high wear and regular maintenance shall not be covered under this warranty. This warranty shall be void if any part or parts not manufactured by SAC are used either in maintaining or servicing of the products covered by this warranty. No warranty whatsoever is made on used, secondhand, altered, or rebuilt machinery.

THE OWNERS WARRANTY REGISTRATION MUST BE RECEIVED BY SAC OR AN AUTHORIZED SAC DEALER WITHIN 30 DAYS OF DELIVERY OR ALL WARRANTY IS NULL AND VOID.

THIS WARRANTY IS EXTENDED ONLY TO THE INITIAL PURCHASER FROM AN AUTHORIZED SAC DEALER AND MAY NOT BE REASSIGNED. THIS WARRANTY IS EXPRESSLY IN LIEU OF ANY OTHER WARRANTIES EXPRESSED OR IMPLIED, INCLUDING ANY IMPLIED WARRANTIES OF MERCHANTABILITY OR FOR A PARTICULAR PURPOSE AND SAC NEITHER ASSUMES OR AUTHORIZES ANY OTHER PERSON TO ASSUME FOR IT ANY OTHER LIABILITY. THERE ARE NO WARRANTIES WHICH EXTEND BEYOND THE DESCRIPTION ON THE FACE THEREOF.

We reserve the right to make improvements to any of our products without notice or obligation regarding models previously sold.

SIOUX AUTOMATION CENTER, INC.

SCALE WARRANTY

All scale equipment will be warrantied under the original manufacture warranty. However, SIOUX AUTOMATION CENTER, INC.(Hereafter noted as SAC.) warrants to the original purchaser a LIFETIME LABOR WARRANTY on Weigh Tronix and Digi-Star scale and remote indicators. The terms of warranty are:

LIFETIME - From date of sale to the Original Purchaser: All labor needed to repair the original Weigh Tronix and Digi-Star scale and remote indicators.

This warranty, as described above, is expressly limited to the labor needed to repair the scale indicator and the remote indicators and does not cover the costs of any parts that may be needed for the indicators repair. All scale indicator labor will be performed at the SAC factory. Any labor performed outside of the SAC factory will not be covered under this warranty. All warranty decisions will be final!

This warranty does not cover the cost of labor, parts or transportation charges when any party other than SAC performs the replacement or repair of parts claimed to be defective, nor shall this warranty apply to an SAC product upon which any alterations or repairs other than normal maintenance have been made without the written approval of SAC.

SAC shall in no event be liable for consequential damages, lost profits or contingent liabilities arising out of the failure of any SAC product or parts to operate properly.

WARRANTY CARD MUST BE FILLED OUT AND RETURNED TO FACTORY IMMEDIATELY UPON RECEIPT OF EQUIPMENT TO INSURE WARRANTY COVERAGE.

THIS WARRANTY IS EXTENDED ONLY TO THE INITIAL PURCHASER FROM AN AUTHORIZED SAC DISTRIBUTOR AND MAY NOT BE REASSIGNED. THIS WARRANTY IS EXPRESSLY IN LIEU OF ANY OTHER WARRANTIES EXPRESSED OR IMPLIED, INCLUDING ANY IMPLIED WARRANTIES OF MERCHANTABILITY OR FOR A PARTICULAR PURPOSE AND SAC NEITHER ASSUMES OR AUTHORIZES ANY OTHER PERSON TO ASSUME FOR IT ANY OTHER LIABILITY. THERE ARE NO WARRANTIES, WHICH EXTEND BEYOND THE DESCRIPTION OF THE FACE HEREOF.

We reserve the right to make improvements to any of our products without notice or obligation regarding models previously sold.

MAN00963 **Effective 12/12**

SAC
SIOUX AUTOMATION CENTER