SIOUX AUTOMATION CENTER

MON600157 Rev N 4/6/17

MAXI-MIXER
4600 TRUCK
OPERATORS MANUAL

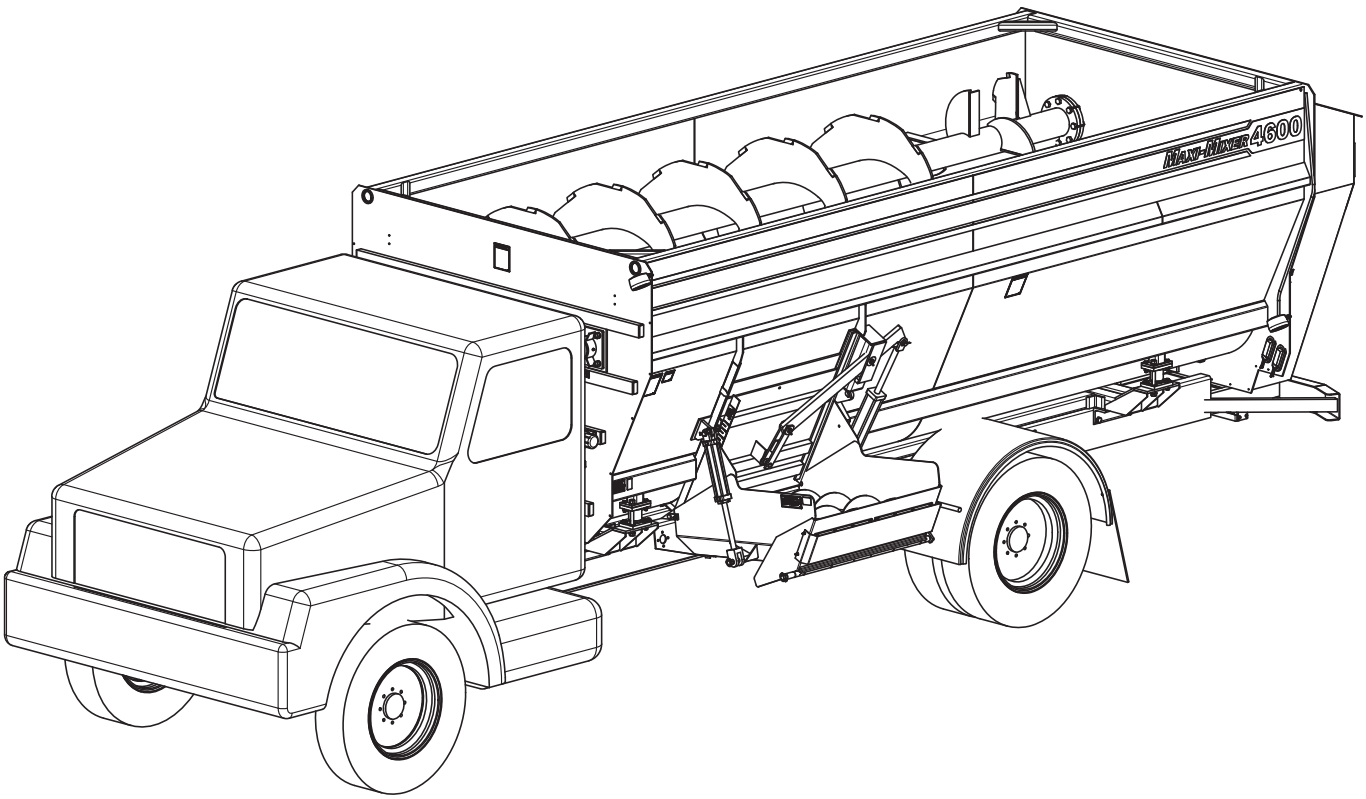

OPERATION
REPLACEMENT PARTS

READ complete manual CAREFULLY
BEFORE attempting operation.

877 1st Ave. N.W. | Sioux Center, IA 51250 | Toll Free: 1.866.722.1488 | siouxautomation.com

REV	DATE	BILL OF MATERIALS	DESCRIPTION
F	7/30/13	MON900505, MON900506 MON900507, MON900509 MON900510, MON900511 MON900512, MON900837 MON900845, MON900847 MON900848	UPDATE AUGER DISCHARGES TO REFLECT CHANGES IN HYDRAULIC CYLINDERS
		MON700783	ADDED COUNTER CLOCK-WISE TOP LEFT HAND AUGER
G	12/6/13	MON900501 & MON900521 SAC26016	ADDED SERIAL NUMBER BREAK FOR HYDRAULIC PUMPS MON800598 & HYDP20C494EJ12 ADDED SERIAL NUMBER BREAK FOR 2:1 GEARBOX MON800599 & SP2:1GEARBOX
H	1/13/14	UPDATED ALL BOM'S	
J	7/9/14	MON900987 & MON900989	UPDATED ALL GRAPHICS AND BOM'S AND ADDED MON900987 & MON900989 FENDER KITS
K	8/20/14	MON900478 & MON900992	UPDATED MON900478 TO INCLUDE MON900992 & ADDED MON900992 TO MANUAL
L	11/5/14	MON900478	ADD MON901004 & MON901004-1 TO SALES OPTIONS
M	12/30/15	REVIEWED ALL BOMS & UPDATED ALL GRAPHICS	ADDED CONSOLE AND HYDRO INFORMATION ADDED SLAT DICHARGE BASE ASSEMBLIES UPDATED SCALE KIT INFORMATION
N	4/6/17	REVEIWED ALL DRAWINGS AND BOM'S AND UPDATED AS NEEDED.	

INTRODUCTION

Thank you for purchasing a Maxi-Mixer Truck. We feel you have made a wise choice and hope you are completely satisfied with your new piece of equipment. Your new Maxi-Mixer Truck is a durable, efficient and easy to use unit. Proper care and use will result in many years of service.

WARNING: TO AVOID PERSONAL INJURY OR DEATH, OBSERVE FOLLOWING INSTRUCTIONS:

Never overload mixer. Follow rating of chassis or rating of tires, whichever is less.

Ensure that anybody present is clear before applying power to any machinery used in conjunction with wagon box or when moving box.

Never allow anyone in, near, or on mixing chamber during mixing, transporting, or unloading of feed.

GENERAL INFORMATION

1. Unless otherwise specified, high-strength (grade5) (3 radial-line head markings) hex head bolts are used throughout assembly of this piece of equipment.
2. Whenever terms **"LEFT"** and **"RIGHT"** are used in this manual it means from a position behind the wagon box and facing forward.
3. When placing a parts order, refer to this manual for proper part numbers and place order by **PART NO. and DESCRIPTION.**
4. Read assembly instructions carefully. Study assembly procedures and all illustrations before you begin assembly. Note which parts are used in each step. This unit must be assembled in proper sequence or complications will result.

Table of Contents

General Information....3
Model and Serial Number Information....4
Safety , Signal Words....6
Equipment Safety Guidelines....7
Lighting and Marking....7
Safety Sign Care....7
Tire Safety....8
Before Operation....8
During Operation....9-10
Following Operation....10
Highway and Transport Operations....10-11
Performing Maintenance....11
Bolt Torque....12
Mixer Setup....13
Mixer Operation....14-15
Cold Weather Operation/Pump Systems....16
Solenoid Control Vavles....17
Hydraulic Filtration....18-21
Control Console and Display....22-25
Maintenance/Inspections and Adjustments....26
Lubrication Schedule....27
Planetary Notes....28
Decal Location....29
Base Assembly....30-32
Final Assembly....34-37
Augers....38-39
Auger Roughage Kit....40
Rubber Extension Kit....41
Discharge Assemblies....42-53
Discharge Hydraulic Assemblies....54-61
Console Assemblies....62-63
Switchbox Assemblies....64-67
Driveline Assemblies....68-79
Oil Specification Appendix....71
Shear Yoke Breakdown....80
General Specifications....80
Scale Kit....81
Light Kit....82-83
Front and Rear Bumper Options....84-85
Fender Kits....86-89
Warranties....90-91

MODEL AND SERIAL NUMBER IDENTIFICATION

Your model and serial numbers can be located on the front left hand side of the mixer. Please copy this information and write them down inside of this manual. This will allow easy reference if the ordering of parts should become necessary.

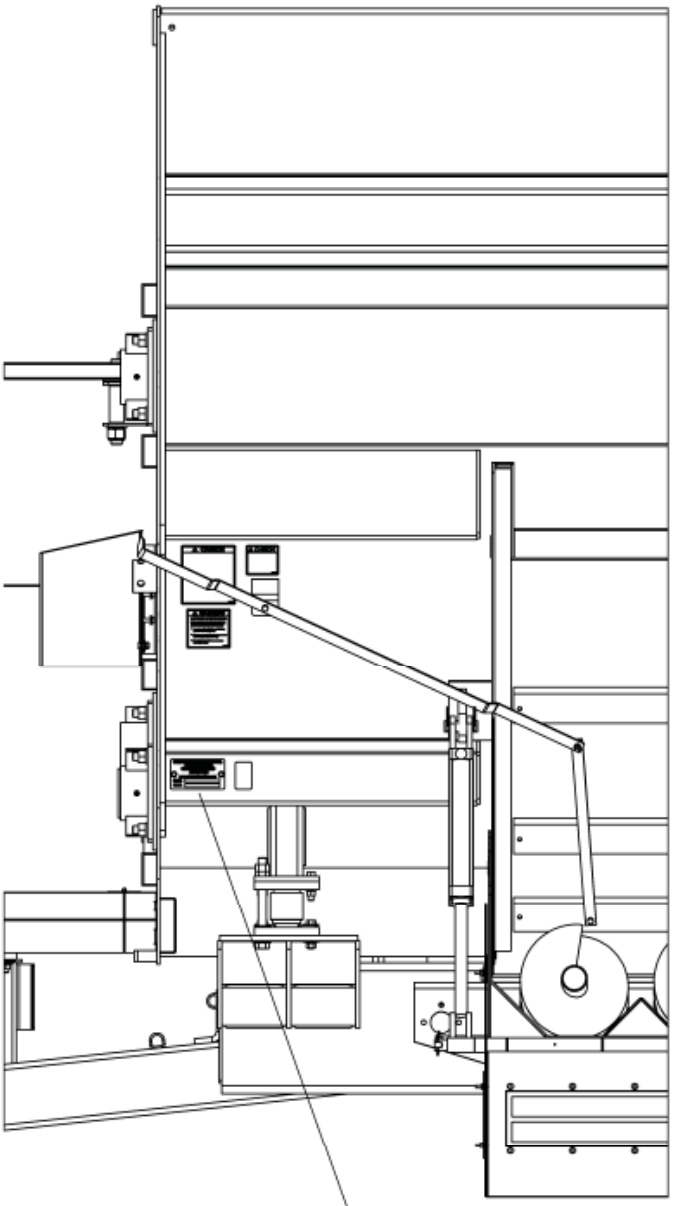

SIOUX AUTOMATION CENTER INC.
877 1ST AVENUE N.W.
SIOUX CENTER, IA 51250
712-722-1488

www.siouxautomation.com

MODEL

SERIAL

NOTES

SAFETY: YOU CAN LIVE WITH IT!

TAKE NOTE! THIS SAFETY ALERT SYMBOL FOUND THROUGHOUT THIS MANUAL IS USED TO CALL YOUR ATTENTION TO INSTRUCTIONS INVOLVING YOUR PERSONAL SAFETY AND SAFETY OF OTHERS. FAILURE TO FOLLOW THESE INSTRUCTIONS CAN RESULT IN INJURY OR DEATH!

THIS SYMBOL MEANS

ATTENTION

BECOME ALERT

YOUR SAFETY IS INVOLVED!

SIGNAL WORDS

Note: use of following signal words **DANGER**, **WARNING**, and **CAUTION** with safety messages. Appropriate signal word for each has been selected using following guidelines:

DANGER:

Indicates an imminently hazardous situation that, if not avoided, will result in serious injury or death. This signal word is to be limited to most extreme situations typically for machine components which, for functional purposes, cannot be guarded.

WARNING:

Indicates a potentially hazardous situation that, if not avoided, could result in serious injury or death, and includes hazards that are exposed when guards are removed. It may also be used to alert against unsafe practices.

CAUTION:

Indicates a potentially hazardous situation that, if not avoided, may result in minor or moderate injury. It may also be used to alert against unsafe practices.

SAFETY...YOU CAN LIVE WITH IT

EQUIPMENT SAFETY GUIDELINES

Every year many accidents occur which could have been avoided by a few seconds of thought and a more careful approach to handling equipment. You, the operator, can avoid many accidents by observing the following precautions in this section. To avoid personal injury, study the following precautions and insist those working with you, and you yourself, follow them.

In order to provide a better view, certain illustrations in this manual may show an assembly with a safety shield removed. However, equipment should never be operated in this condition. Keep all shields in place. If shield removal becomes necessary for repairs, replace shield prior to use.

Replace any CAUTION, WARNING, DANGER or instruction safety decal that is not readable or is missing. Location of such decals is indicated in this manual.

Do not attempt to operate this equipment under the influence of alcohol or drugs.

Review safety instructions with all users annually.

Operator should be a responsible adult. DO NOT ALLOW PERSONS TO OPERATE OR ASSEMBLE THIS UNIT UNTIL THEY HAVE READ THIS MANUAL AND HAVE DEVELOPED A THOROUGH UNDERSTANDING OF THE SAFETY PRECAUTIONS AND PROPER OPERATIONAL PROCEDURES.

Do not paint over, remove, or deface any safety signs or warning decals on your equipment. Observe all safety signs and practice the instructions on them.

Never exceed limits of a piece of machinery. If its ability to do a job, or to do so safely is in question DON'T TRY IT.

LIGHTING AND MARKING

It is the responsibility of customer to know lighting and marking requirements of the local highway authorities and to install and maintain the equipment to provide compliance with the regulations. Add extra lights when transporting at night or during periods of limited visibility. Lighting kits are available from your dealer or from manufacturer.

SAFETY SIGN CARE

- Keep safety signs clean and legible at all times.
- Replace safety signs that are missing or have become illegible.
- Replaced parts that displayed safety signs should also display current safety sign.
- Safety signs are available from your distributor, dealer parts department, or the factory.

How to install safety signs:

- Be sure that installation area is clean and dry.
- Decide on exact position before you remove backing paper.
- Remove smallest portion of split backing paper.
- Align decal over specified area and carefully press small portion with exposed sticky backing in place.
- Slowly peel back remaining paper and carefully smooth remaining portion of decal into place.
- Small air pockets can be pierced with a pin and smoothed out using piece of decal backing paper.

SAFETY

TIRE SAFETY

- Failure to follow proper procedures when mounting a tire on a rim can produce an explosion which may result in a serious injury or death.
- Do not attempt to mount a tire unless you have proper equipment and experience to do the job.
- Inflating or servicing tires can be dangerous. Whenever possible, trained personnel should be called to service and/or mount tires.
- Always order and install tires and wheels with appropriate type and load capacity to meet or exceed anticipated weight to be placed on the equipment.

REMEMBER

Your best assurance against accidents is a careful and responsible operator. If there is any portion of this manual or function you do not understand, contact your local authorized dealer or manufacturer.

BEFORE OPERATION:

- Carefully study and understand this manual.
- Do not wear loose-fitting clothing which may catch in moving parts.
- Always wear protective clothing and substantial shoes.
- It is recommended that suitable hearing and eye protection be worn.
- Operator may come in contact with certain materials which may require specific safety equipment relative to handling of such materials.
- Keep wheel and lug nuts tightened to specified torque.
- Assure that truck tires are inflated to recommended air pressure.
- Give unit a visual inspection for any loose bolts, worn parts or cracked welds, and make necessary repairs. Follow the maintenance safety instructions included in this manual.
- Be sure there are no tools lying on or in equipment.
- Do not use unit until you are sure that area is clear, especially around children and animals.
- Don't hurry the learning process or take the unit for granted. Ease into it and become familiar with your new equipment.
- Practice operation of your equipment and its attachments. Completely familiarize yourself and other operators with its operation before using.
- Make sure that brakes are evenly adjusted.
- Fasten your seat belt prior to starting the engine.

DURING OPERATION

- Be aware of bystanders, PARTICULARLY CHILDREN! Always look around to make sure that it is safe to start the engine or to move the unit. This is particularly important with higher noise levels and quiet cabs, as you may not hear people shouting.
- NO PASSENGERS ALLOWED- Do not allow anyone to ride on or inside the mixer at any time!
- Keep hands and clothing clear of moving parts.
- Do not clean, lubricate, or adjust your equipment while it is moving.
- When halting operation, even periodically, set vehicle brakes, disengage PTO, shut off engine, and remove ignition key.
- Be especially observant of the operating area and terrain. Watch for holes, rocks, or other hidden hazards. Always inspect area prior to operation.
  - DO NOT operate near edge of drop-offs or banks.
  - DO NOT operate on steep slopes as overturn may result.
  - Operate up and down (not across) intermediate slopes. Avoid sudden starts and stops.
- Pick the most level possible route when transporting across fields. Avoid edges of ditches, gullies, and steep hillsides.
- Be extra careful when working on inclines.
- Maneuver truck at safe speeds.
- Avoid overhead wires or other obstacles. Contact with overhead lines could cause serious injury or death.
- Avoid loose gravel, rocks, and holes; they can be dangerous for equipment operation or movement.
- Allow for unit length when making turns.
- Do not walk or work under raised components or attachments unless securely positioned and blocked.
- Keep all bystanders, pets, and livestock clear of work area.
- Operate truck from operators seat only.
- Never stand alongside of unit with engine running or attempt to start engine and/or operate machine while standing alongside of unit.
- Never leave running equipment unattended.
- As a precaution, always recheck hardware on equipment following every 100 hours of operation. Correct all problems. Follow maintenance safety procedures.
- Never hand feed materials into mixer while it is running. Rotating augers inside mixer may not be visible from the loading point, and may cut or grab hands, clothing, or material being loaded, causing severe injury. Always stop the trucks engine before hand loading materials.
- Do not allow operation of this unit by inexperienced or unqualified people. Keep all unqualifed people away from the mixer during operation. Operators of this unit must be alert and use good judgement at all times. Operator should not climb on ladder or any part of the mixer when loading, mixing, or unloading material.

- Be sure the inside of the mixer is clear of any obstruction before operating and that all shields are in place. This includes any truck and driveline shields. Repair or replace any damaged or missing shields. Exposed shafts can grab hands and clothing and cause severe injury or death.

- Use caution when working around the discharge area. Stay clear of power chute & slide tray. These are controlled from the cab and could operate without warning, creating pinch points which could cause severe injury or death. Always stop the truck's engine and remove the trucks ignition key before working close to or near the discharge area.

- Never attempt to release jammed materials or clean materials from any area of the mixer or discharge chute without stopping the engine first. Moving parts can be hidden by materials, and stopped parts can start unexpectedly, causing severe injury. Always disengage the PTO driveline so that the mixer cannot be accidentally turned on before attempting to remove jammed material or to clean.

- Never put arms or feet inside unit, power chute, or near discharge door opening, nor climb on or in the mixer while it is running. NEVER allow anyone to position themselves over or near the top of the mixer while it is running. Rotating augers and sprockets can grab clothing or create pinch points which can cause severe injury or death to the operator or bystanders. Always disengage the PTO driveline, stop the truck engine, and remove the ignition key so that the mixer cannot be accidentally turned on while inspecting, servicing, repairing, or cleaning.

FOLLOWING OPERATION

- Following operation disengage PTO, set brakes, shut off engine and remove the ignition key.

- Store unit in an area away from human activity.

- Do not park equipment where it will be exposed to livestock for long periods of time. Damage and livestock injury could result.

- Do not permit children to play on or around stored unit.

- Make sure all parked machines are on a hard, level surface and engage all safety devices.

- Wheel chocks may be needed to prevent unit from rolling.

HIGHWAY AND TRANSPORT OPERATIONS

- If equipment is going to be transported on a public highway, always follow state and local regulations regarding safety and auxiliary lighting. Be sure to check with local law enforcement agencies for your own particular regulations. The end user is responsible for federal, state and local vehicle safety regulation compliance (ex: requirements for weight, lighting, etc.).

- Adopt safe driving practices:

  - Always drive at a safe speed relative to local conditions, ensure that your speed is low enough for an emergency stop. Keep speed to a minimum.

  - Reduce speed prior to turns to avoid risk of overturning.

  - Always keep the truck's transmission in gear to provide engine braking when going downhill. Do not coast.

  - ***Do not drink and drive!***

HIGHWAY AND TRANSPORT OPERATIONS

- Comply with state and local laws governing highway safety and movement of farm machinery on public roads.
- Use approved accessory lighting, flags and necessary warning devices to protect operators of other vehicles on highway during transport. Various safety lights and devices are available from your dealer.
- Plan your route to avoid heavy traffic.
- Be a safe and courteous driver. Always yield to oncoming traffic in all situations, including narrow bridges, intersections, etc.
- Be observant of bridge load ratings. Do not cross bridges rated lower than gross weight at which you are operating.
- Watch for obstructions overhead and side to side while transporting.
- Always operate equipment in a position to provide maximum visibility. Make allowances for increased length and weight of equipment when making turns, stopping unit, etc.

PERFORMING MAINTENANCE

- Good maintenance is your responsibility. Poor maintenance is an invitation for trouble.
- Make sure there is plenty of ventilation. Never operate engine in a closed building. Exhaust fumes may cause asphyxiation.
- Before working on this machine, stop the vehicle, set brakes, shut off engine and remove ignition key.
- Always use safety support and block wheels. Never use a jack to support machine.
- Always use proper tools or equipment for the job at hand.
- Use extreme caution when making adjustments.
- Follow torque chart in this manual when tightening bolts and nuts.
- Never use your hands to locate a hydraulic leak on attachments. Use a small piece of cardboard or wood. Hydraulic fluid escaping under pressure can penetrate skin.
- Openings in skin and minor cuts are susceptible to infection from hydraulic fluid. Without immediate medical treatment, serious infection and reactions can occur.
- When disconnecting hydraulic lines, shut off hydraulic supply and relieve all hydraulic pressure.
- Replace all shields and guards after servicing and before moving equipment.
- After servicing, be sure all tools, parts, and service equipment are removed.
- Do not allow grease or oil to build up on any step or platform.
- When replacing bolts, refer to owner's manual.
- Refer to bolt torque chart for head identification marking.
- Where replacement parts are necessary for periodic maintenance and servicing, genuine factory replacement parts must be used to restore your equipment to original specifications. Manufacturer will not claim responsibility for use of unapproved parts or accessories and other damages as a result of their use.
- If equipment has been altered in any way from original design, manufacturer does not accept any liability for injury or warranty.
- A fire extinguisher and first aid kit should be kept readily accessible while performing maintenance on this equipment.

BOLT TORQUE

TORQUE DATA FOR STANDARD NUTS, BOLTS, AND CAP SCREWS.

Tighten all bolts to torques specified in chart unless otherwise noted. Check tightness of bolts periodically, using bolt chart as guide. Replace hardware with same grade bolt.

NOTE: Unless otherwise specified, high-strength Grade 5 hex bolts are used throughout assembly of equipment.

Torque Specifications

Bolt Torque for Standard bolts *

	GRADE 2		GRADE 5		GRADE 8	
"A"	lb-ft	(N.m)	lb-ft	(N.m)	lb-ft	(N.m)
1/4"	6	(8)	9	(12)	12	(16)
5/16"	10	(13)	18	(25)	25	(35)
3/8"	20	(27)	30	(40)	45	(60)
7/16"	30	(40)	50	(70)	80	(110)
1/2"	45	(60)	75	(100)	115	(155)
9/16"	70	(95)	115	(155)	165	(220)
5/8"	95	(130)	150	(200)	225	(300)
3/4"	165	(225)	290	(390)	400	(540)
7/8"	170	(230)	420	(570)	650	(880)
1"	225	(300)	630	(850)	970	(1310)

Bolt Torque for Metric bolts *

	CLASS 8.8		CLASS 9.8		CLASS 10.9	
"A"	lb-ft	(N.m)	lb-ft	(N.m)	lb-ft	(N.m)
6	9	(13)	10	(14)	13	(17)
7	15	(21)	18	(24)	21	(29)
8	23	(31)	25	(34)	31	(42)
10	45	(61)	50	(68)	61	(83)
12	78	(106)	88	(118)	106	(144)
14	125	(169)	140	(189)	170	(230)
16	194	(263)	216	(293)	263	(357)
18	268	(363)	--	--	364	(493)
20	378	(513)	--	--	515	(689)
22	516	(699)	--	--	702	(952)
24	654	(886)	--	--	890	(1206)

Torque figures indicated are valid for non-greased or non-oiled threads and heads unless otherwise specfied. Therefore, do not grease or oil bolts or capscrews unless otherwise specified in this manual. When using locking elements, increase torque values by 5%.

* GRADE or CLASS value for bolts and capscrews are identified by their head markings.

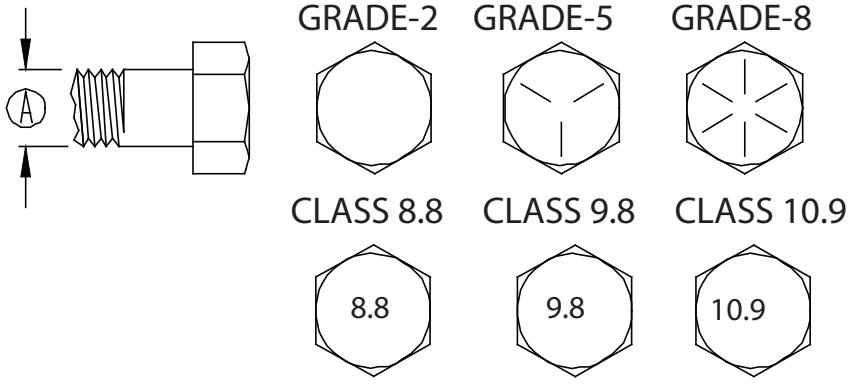

MIXER SETUP

To avoid personal injury: The mixer floor may be slippery and the augers and reel can spin unexpectedly when stepped on. Use caution when stepping or standing inside the unit, place a protective cover over the augers when work inside the box is required.

MIXER RUN-IN

A. Before Starting:
- •Check oil level and condition in the supply tank of the planetary gearboxes.
- •Be sure all shields are properly in place.
- •Cycle the unloading door and conveyor several times to fully charge the hydraulic system with oil.
- •Be sure that the augers can turn freely.
- •Check for debris and/or any other items that could block or affect machine operation.
- •Be sure that drain plugs are installed and the door is closed.
- •Top off the hydraulic oil reservoir if required.

B. Test run the mixer.
- Make sure mixer is empty, then start the mixer.
- Run for at least five minutes at recommended RPM.
- Raise and lower the door and operate the conveyor/slide tray several times.
- Disengage the mixer and turn off the truck engine and remove the ignition key.
- Check the mixer drive components to be sure they are not abnormally hot.

C. After operating for ½ hour:
- •Check that all bolts and fasteners are all tightened properly. (See Torque Spec.)
- •Check that all wheel nuts are tight.
- •Check the augers. Remove all string, twine, or other entangled material.
- •Check that no hoses are pinched, rubbing, or being crimped. Re-align as required.
- •Check for oil leaks. Stop leaks before continuing.
- •Lubricate all grease fittings.

D. After operating for 5 hours and 10 hours:
- •Re-torque all wheel nuts, fasteners, and hardware.
- •Check the augers and reel. Remove all string, twine, or other entangled material.
- •Proceed with normal servicing and maintenance schedule as defined in the Maintenance Section.

E. After operating 50-100 hours:
- Change suction filters to remove initial contaminants.
- Change the Auxiliary filter.
- Change the hydro filters

If any of these items are not running as indicated, immediately repair or contact your service representative.

ELECTRONIC SCALES

- Scale Indicator: Refer to the electronic scale operators manual for adjustment information. The operator's manual for the Electronic Scales should be kept with this manual. Additional scale manuals may be obtained through Sioux Automation Center, Inc.

- Load Cells: Should be kept clean and dry to ensure dependability. DO NOT POWERWASH!

- Normal Scale Activity: Some warm up scale "drift" may occur after the scale is turned on but should zero balance within 10-15 minutes. Scale may zero shift over night due to temperature changes.

MIXER OPERATION

Always refer to Equipment Safety Guidelines & Before Operation sections of this manual before operating this mixer.

GENERAL

- The Turbo-Max Mixer was designed for blending dairy and beef rations. Most commonly used ingredients, including limited amounts of dry stem hay, can be mixed quickly and uniformly in this mixer. If you have questions regarding your feed ration or have other applications, please contact Sioux Automation Center, Inc.

- Mixing performance can vary greatly according to the differences in materials, loading sequence, mixing speed, and unloading methods.

SAFETY

- When the mixer is in operation it has many moving parts which could cause severe injury or death to persons coming in contact with these parts. To help avoid serious accidents, please read and understand this manual.

LIMITATIONS

- **Do not load hay without** other dry commodities in the mixer first to act as a carrier or "lubricant".

- **Do not overload hay content**, Sioux Automation Center Inc. recommends up to 15%-20% of hay by weight in the load. Exceeding this percentage can decrease mixing performance or could potentially damage mixer and cause premature wear on driveline components.

WARNINGS

- **Do not use tough hay** (20%-60% moisture) Always used cured, dry hay. Wet hay, foreign objects or overloading may cause binding and damage to the mixer.

- **Keep in mind the overall size of the mixer** to allow clearance through doorways.

MIXING TIME

- The mixer can mix an average load in 3 to 5 minutes. Due to this short mixing time, there is normally no reason to run the mixer during loading except to level the materials.

MIXING SPEED

- When deciding when and how fast to operate the mixer, factors such as ingredients being used, the thoroughness of the mix, and the time available to mix must be considered. Normal mixing speed is 3/4 to full PTO speed.

- Do not exceed rated PTO speed. When the mixer is operated faster than rated PTO speed the strain on the drive train and mixer is greatly increased.

FILL LEVEL

- **Do not overload the mixer!** Overloading causes excessive horepower requirements, increased strain on the mixer driveline and poor mixer performance.

HAY QUALITY

- **Always use cured dry hay.** Tough hay can cause wrapping, binding and damage to the mixer and can adversely effect the mixing performance. The following are some examples that contribute to tough hay conditions: high moisture content, high grass content, high density bales,outdoor storage, use of hay preservatives, and excessive stem length.

MIXER OPERATION

MATERIAL THAT CAN BE LOADED DIRECTLY INTO THE MIXER

- Many different kinds of materials can be mixed with the Turbo-Max Mixer, but each kind of material has its own unique characteristics.

- **FORAGES**- Chopped hay, corn silage, and finely chopped crop residue can be mixed in the mixer. Wet and heavy forages added in large volumes may require more power to mix.

- **GRAINS**- Ground, rolled, flaked, and whole cereal grains, minerals, and concentrates, are all very easily mixed, and can improve the mixing performance of the other materials.

- **LIQUIDS**- Supplements and liquid fat can be blended in the mixer. Some operators prefer adding liquids into the empty mixer, and others add liquids on top of grains or roughage. Sticky liquids such as molasses tend to increase the power requirements.

MATERIALS REQUIRING PREPARATION

- The following feed materials require preparation or processing to be mixed in the Turbo-Max Mixer:
  - ALL LONG AND UNCURED GRASSES
  - ROUND BALES, LARGE SQUARE BALES
  - SMALL SQUARE BALES

LOADING AND MIXING

- **Prior to loading, check mixer for foreign objects and be sure the door is fully closed.**
- **Load all commodities from the auger/discharge side of the mixer.**

1. **Load Commodities**
   - Adding ingredients like corn, soybean meal, cottonseed, etc. will act as a carrier or "lubricant" if hay is included in the ration.
   - If there are few commodities in the ration, substituting corn silage or haylage is preferred.
   - Fill mixer between 1/3-1/2 full by volume in commodities and forage before adding the hay to the ration. This will allow enough room for the hay to expand and bring feed level up so the top auger can assist in processing.
2. **Load Hay**
   - Load processed hay. With the mixer running at 3/4 to full PTO speed, proceed loading the small square bale pieces or tub ground hay into the mixer. Do not exceed 15%-20% of hay by weight.
3. **Finish Loading Commodities**
   - Finish loading any other ingredients to complete the ration in order of least binding ingredient to most binding. Example: dry commodities first, corn silage second, haylage last.
4. **Finish Loading Wet Commodities**
   - Any other wet feeds may be added at this time.
5. **Add Liquid Ingredients**
   - If ration includes water, add it last. Adding water at the beginning will cause the hay to bind.

UNLOADING

- After the ration has been thoroughly mixed, open the mixer door to begin unloading. The combination of the discharge door opening and the mixer speed determines the flow of feed from the mixer. The door must be opened far enough to prevent separation of materials.

- The Turbo-Max Mixer is equipped with a slide tray to assist in the delivery of feed. The tray height is adjusted with hydraulic cylinders.

COLD WEATHER OPERATION OF HYDRO DRIVE

In the event of cold weather operating conditions (temps < 35F), it is recommended to add supplementary heat to the hydraulic oil reservoir in order to aid in quicker and easier start ups. Thermostatically controlled magnetic tank heaters (or similar type heaters) can be used to warm the oil near the suction line of the tank. Follow the manufacturers guidlines for using the heaters. It is recommended not to operate the truck faster than an idle or engage the hydro until the oil temperature is near 40F. If the oil is colder than this, the pumps may be starved of oil and damage of the pumps (both hydrostatic and auxiliary) may occur.

-DO NOT Bottom out a gate cylinder so oil goes over the relief in the valve to make the oil heat faster!

-DO NOT Run the hydrostatic pump control until the oil has warmed up!

HYDROSTATIC PUMP SYSTEM

The augers are powered by the hydrostatic pump which is powered by a single driveshaft from the engine. The pump can be set up for either CCW (counter clockwise) or CW (clockwise) rotation. Typically, if the pump is mounted in front of the engine, CCW pumps are installed and CW pumps are used if the pumps are installed behind the engine.
The hydrostatic pump is actuated by an electrical solenoid which is operated from the cab.

AUXILIARY PUMP SYSTEM

Located on the end of the hydrostatic pumps is a single auxiliary hydraulic gear pump. The pump is powered by the main driveline for the machine which ensures hydraulic power is available at all times provided that the truck engine is running. The auxiliary pump provides hydraulic fluid power to components such as the unloading door and the discharge chute. The auxiliary pump is designed for minimal maintenance and service.

ELECTRIC SOLENOID HYDRAULIC CONTROL VALVES

The hydraulic power supplied by the auxiliary pump enters the aluminum block manifold located behind the discharge. The hydraulic flow is divided to the different circuits found on the machine (e.g. discharge door, conveyor). The valves are controlled electronically from the control console located in the truck cab. In the event of power failure, the valves can be controlled manually by depressing the button located on each end of each valve.

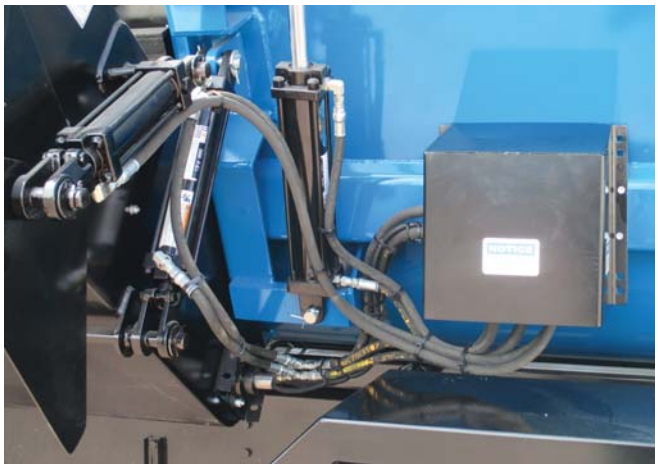

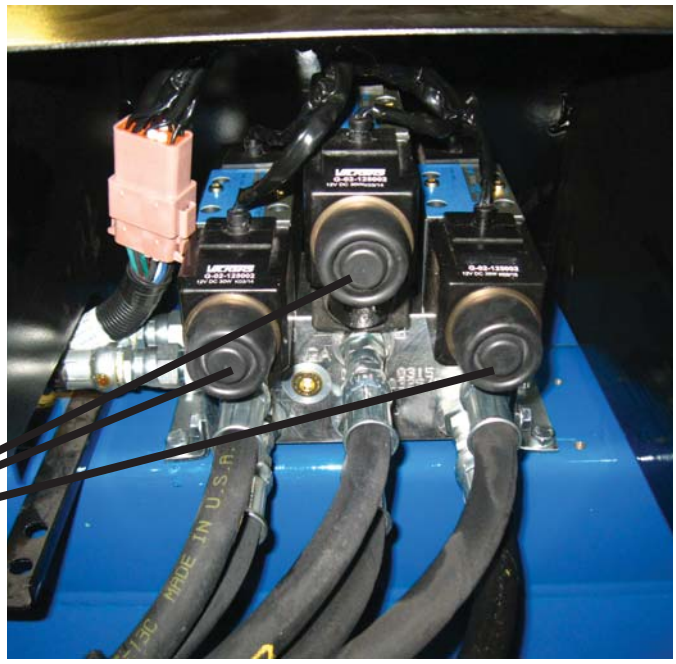

Underside view of DO3 valve

Auxiliary Circuit Filtration

Once hydraulic oil has circulated through the manifold valve and the hydraulic cooler, it exits into a filter assembly located near the hydraulic tank. This assembly filters all of the oil supplied in the auxiliary pump circuit. The filter is a 'spin-on' type of filter. The filter is removed by turning the filter body counterclockwise until it is free from the filter housing. This filter will require periodic service and replacement.

Auxiliary Circut Filter

FILTER SHOWN:
FORCE AMERICA
F3653-10C

Auxiliary Circut Filter

Auxiliary Circuit Filter

Located on the return line on the rear side of the hydrualic tank is the auxiliary oil filter. The filter is a "spin-on" type of filter that will need replacement. **Replace this filter element after 50 hours of break-in use and every 500 hours thereafter.**

Important: *When replacing, inspect the filter for excessive contamination. Often, a severely contaminated filter is indicative of required servicing of the hydraulic system.*

Filter Replacement (Auxiliary Circuit Filter)

1. Make sure that the filter housing and filter are clean and free of any debris and/or contaminants.
2. Make sure that the replacement filter is the correct type for the application.
3. Place a large drain pan or pail underneath the filter housing.
4. Using a filter wrench, remove the filter by turning the filter body counterclockwise until it is free from the housing.
5. Allow sufficient time for any oil in the surrounding hoses to drain into the pan or pail. Allow oil to drain out of the filter itself.
6. Visually inspect the condition of the filter. Determine if any further servicing of the hydraulic system is required.
7. Dispose of the used oil in an environmentally safe manner.
8. Lubricate the top o-ring seal of the replacement filter with oil to ensure a smooth and tight seal upon contact with the filter housing.
9. To assist in preventing air locks in the hydraulic system, fill the filter with hydraulic oil, prior to attaching to the housing. This will also lubricate the filtering media inside the filter.
10. Turn the filter body onto the housing clockwise until it is hand-tight on the housing.
11. Top up the hydraulic oil reservoir with oil if necessary.
12. Follow all instructions outlined in the operator's manual and startup the hydraulic system and run. Check for and repair any leaks that may arise.

BRAND NAME	PART NUMBER
SAC	HYD1A9021
FORCE AMERICA	F3653-10C
NAPA	1551
ZINGA	AE10

HYDRAULIC FILTRATION

The hydraulic oil used in the hydraulic system on your 6100 series mixer was selected for its heavy duty operating properties. This minimizes frequent hydraulic oil changes and extends the life of the hydraulic systems components. It is recommended to **change the hydraulic oil every 1000 hours of regular use** or when oil properties degrade. If the fluid becomes black it is a sign that the fluid is overheating. Also, if the fluid appears to be milky, this is a sign of water contamination.

If in doubt as to the condition of your hydraulic oil, contact your authorized SAC Dealer or Distributor or your local hydraulic service center. A sample of the hydraulic oil can be tested with the correct testing equipment. Good condition hydraulic oil must meet the following minimum requirements.

1. **Water Content in Hydraulic Oil <100 Parts/Million**
2. **Viscosity of Hydraulic Oil +/- 10% of Original Specification**
3. **ISO Oil Cleanliness Standard of 18/13**

Your mixer is equipped with an integrated charge pump filter. It is critical that this filter is changed on a regular basis to keep the system running normal. The charge filter (1 per unit, located on the hydrostatic pump next to the auxiliary pump) must be changed within 20 hours of initial startup. The filter must be changed again at 100 hours of use. After the first two initial filter changes within 100 hours of startup, the filter changes must occur every 250 hours therafter.

The auxiliary circuit filter (located near the cooling fan) must be changed after 50 hours of initial startup and every 500 hours thereafter.

Changing Hydraulic Oil and Reservoir Maintenance

The following steps should be followed to change the hydraulic fluid and clean the reservoir:

1. Position catch containers under the reservoir below the drain plug. Make sure the ball valves located on the tank are in the open position. **The volume of the hydraulic reservior is large; make sure the selected conainers are suitable to hold the complete volume of fluid.**

<u>Approximate Hydraulic Oil Reservoir Capacity</u>
30 Gallons each (114 litres each)

Breather Cap replacement part # STI700594

Hydraulic Oil Level and Temperature Gage. replacement part# STI702230

2. Remove the drain plug and allow the oil to drain.
3. Dispose of the used oil in an evironmentally safe manner.
4. **Remove and inspect the Reservoir Suction Strainers:**
   a. Disconnect the suction lines (a.k.a. supply line) from the shutoff valves.
   b. Remove any further fittings to permit access to the suction strainers.
   c. Remove the suction strainers by turning the large hexagonal flange on the lower left hand side of the unit counterclockwise until it is free from the reservoir.
   d. Thoroughly inspect the suction strainers for foreigh matter and/or damage.
   e. If the suction strainers are undamaged, clean the suction strainers with a degreasing solution and a brush. If there are any signs of damage to the suction strainers, replace them with new strainers. See the section that follows for replacement information on the suction strainer.
   f. Reinstall the suction strainer, suction line, and necessary fittings. Use an appropriate pipe thread seal on all threaded connections.
5. Reinstall the drain plug. Use an appropriate pipe thread sealant on the threads of the drain plug.
6. Remove and inspect the hydrostatic oil reservoir breather/filler cap. **Follow the breather/filler cap service and maintenance instructions following this section.**
7. Add new **filtered** hydraulic oil of the appropriate specification to the hydrostatic oil reservior. Add the oil slowly and carefully to avoid spillage. Continue filling the reservoir until the oil level gauge on the side of the reservoir indicates that it is full. All oil should be filtered through a 10 micron filter before adding to the reservoir.
8. Turn the suction line shutoff valves to the closed position.
9. Loosen the suction hose fittings at the charge pump inlet and at the auxiliary pump inlet.
10. Allow fluid to run out of these connections into a suitable container. Have an assistant open and close the suction line shutoff valves to control the flow of hydraulic oil.

Important: This step is to be done to force out and minimize air in the hydraullic system. Excessive amounts of air in the hydraulic system can cause instability and cavitation of the hydraulic system.

11. Tighten all connections undone in step 9.
12. **Ensure that both the reservoir suction line shutoff valves and the reservoir inlet line shutoff valves (if equipped) are completely open.**
13. Add additional hydraulic oil to the reservoir to maintain appropriate oil level as indicated on the oil level gauge.
14. Following the startup procedures in the chassis Operators Manual, start the truck engine and while running at an idle allow the pumps to operate neutral for 5 miutes to allow the system to fill with oil and purge any air in the system.
15. Engage the pumps after 5 minutes. Check for hydraulic leaks and verify proper operation of the machine.

Reservoir Suction Strainer Specification

The replacement suction strainer for the hydraulic system is as follows:

SAC- HYDS25100RV3
LHA BRAND-TM-25-100-RV5
FORCE AMERICA-TFS122003

Keep the system clean! If any hose fittings are removed at any time on the hydrostatic system, it is extremely important that the connection area is cleaned prior to hose removal to keep foreign material out of the system. Hose ends, pump ports, and fittings should be immediately capped upon removal of any hose or fitting to keep contaminants out of the hydrostatic system. **Do not use paper towels or rags to plug hoses or ports. Lint can cause severe damage to pumps and motors.** Failure to keep out contaminants can result in system failure.

Each motor on the mixer is equipped with a pressure gauge. Under normal full load conditions, the pressure of each circuit while running will be in the 3000 to 4000 psi range. Lighter fluffy rations will be less, while heavier or denser rations will be higher. AT NO TIME SHOULD THE SYSTEM BE RUNNING OVER 5000 PSI!

There is a pressure gauge mounted on the hydrostatic pumps to monitor charge pressure. While the pumps are turning the charge pressure will be 150-250 psi. Periodically check the charge pressure to ensure that the system is funtioning properly. Charge pressure lower than 100 psi could cause severe damage to the pumps and motors, and may be an indication of excessive internal leakage in the pump or motor, a restriction in the inlet line to the pump, or a plugged filter.

Monitor the hydraulic system oil temperature on a regular basis while operating. The oil tempurature should never exceed 170 degrees F. If the oil exceeds this temperature it will begin to break down. Damage to the pumps and motors may occur and also shorten their useful life.

Reservoir Breather/Filler Cap

The hydraulic oil reservoir is equipped with a breather/filter cap assembly located at the fill location of the reservoir. This breather cap allows the hydraulic system to vent internal system pressure to the atmosphere. In order to function properly the breather cap must be kept clean and free of contaminants. Always remove any debris or foriegn material buildup away from the breather cap. **Remove and clean the breather cap every 200 hours of operation, or twice annually, or whenever servicing the hydraulic oil reservoir.** To maintain the breather cap, follow this proceedure.

1. **Visually check the breather cap every day.** Remove any material that falls on top of the breater and surround ing areas. Keep clean and allow for free flow of air for venting the internal system pressure to the atmosphere.

Important: Hydraulic oil is added to the hydraulic system through the breather hole. Always clean around the breather prior to removing it and adding oil.

2. **Cleaning the Breather Cap.**
   a. Clean the top of the hydraulic reservoir.
   b. Remove the breather cap.
   c. Remove any buildup in the breather passages. If the breather is clogged or damaged in any way, replace it with a new unit.
   d. Reassemble the breather cap onto the hydraulic tank.

Important: When spraying water to clean the mixer, protect the breather and resrevoir to avoid contamination.

Breather Cap replacement part# STI700594

HYDRAULIC HOSE AND ADAPTER – REPAIR AND SERVICE

Hydraulic hose assemblies, like other products, have a finite service life. The actual service life of a given hose assembly is dependent on many variable factors such as operating pressures, temperatures, and conditions.

Important: *Hose assemblies in service should be inspected frequently for leakage, kinking, corrosion, abrasion, or any other signs of wear or damage.* ***Hose assemblies that are worn or damaged should be removed from service and replaced immediately!***

Should a hydraulic hose and/or adapter require service, contact your local SAC Dealer or Distributor. Always give your Dealer the Model Number and Serial Number of your Turbo-Max Mixer. With this information your Dealer will be able to provide specifications on the construction of the hydraulic circuit. Your Dealer will also be able to provide instructions on how to replace these components and inform you of any safety precautions you may need to know about.

CONTROL CONSOLE AND DISPLAY

Located beside the truck driver's seat is the control console. The control console houses all of the main control switches necessary to operate the machine. Most machine configurations have the following switches and arrangements. Arrangements can vary according to chassis setups.

The master power switch supplies the electrical power to the auger control box.

The mixer speed control knob is connected directly to the hydrostatic pump that drives the augers. This is used to control the speed of the augers.

The auxiliary shift switch is used to change the gear range of the auxiliary transmission of the truck chassis (If so equipped). To avoid loss of drive the shift switch should only be used when the vehicle is at a stand still with the transmission in the NEUTRAL position.

DO NOT ATTEMPT TO CHANGE THE AUXILIARY TRANSMISSION WHILE IN MOTION!

The reversible radiator fan overide switch can be used at any time. The radiator fan is set to reverse itself at a predetermined time interval to help eleviate excess dust and debris buildup on the radiator. This button allows the operator to reverse the airflow on the radiator and should be used if there is a noticeable increase of dust or debris on the radiator or if there is a spike in the engine water temperature.

The hour meter registers how many hours the hydrostatic pump is in operation.

The bunk light switch is an on-off switch that controls the flip chute and rear bumper lights.

The PTO Control Console will have the same setup as the Hydro controllled console with the absence of the speed control box and the addition of the PTO on/off switch. The speed of the augers will be directly controlled by engine speed. In this case the hour meter will register how many hours the PTO is engaged.

CONTROL CONSOLE AND DISPLAY

HYDRO CONTROL CONSOLE AND DISPLAY

PTO CONTROL CONSOLE AND DISPLAY

CONTROL CONSOLE AND DISPLAY

The door control joystick controls both the feed door and the flip chute (if so equipped).

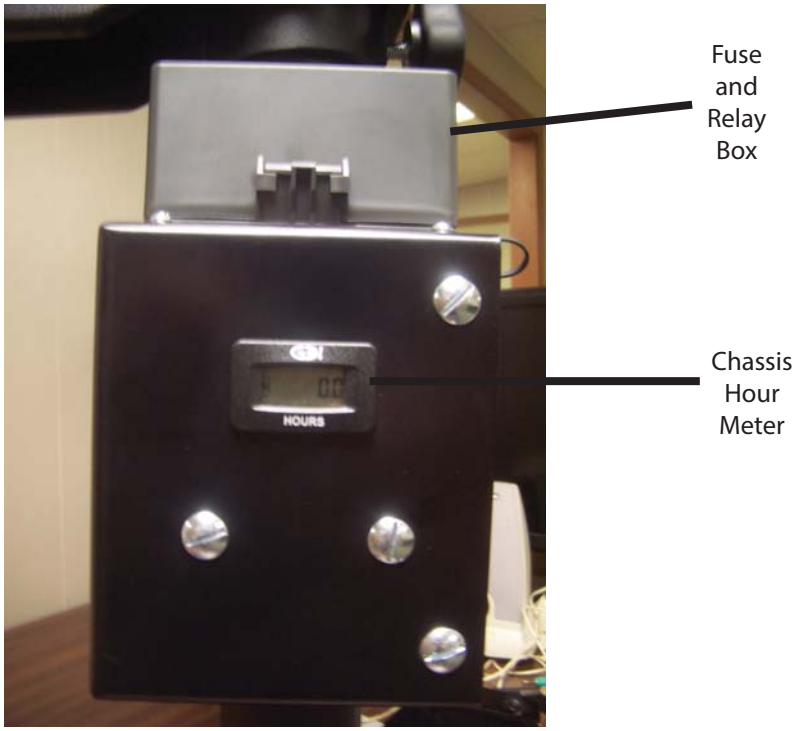

FUSE PANEL RELAY AND FUSE POSITIIONS

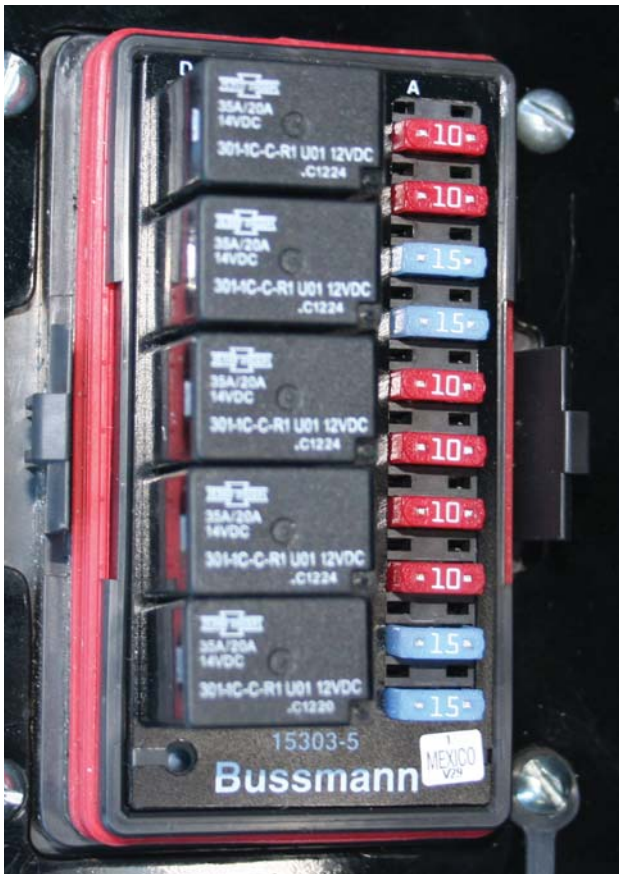

POSITION TOP TO BOTTOM	RELAY
1	CONTROL PEDESTAL REVERSIBLE FAN
2	BUNK LIGHT
3	PUMP CONTROL/PTO CONTROL
4	3 SPEED DROP BOX
5	OIL FAN / AUX POWER

POSITION TOP TO BOTTOM	FUSE / AMPERAGE
1	SCALE POWER / 10A
2	CONTROL PEDESTAL REVERSIBLE FAN / 15A
3	BUNK LIGHT / 10A
4	PUMP CONTROL / PTO CONTROL / 15A
5	3 SPEED DROP BOX / 10A
6	OIL FAN / AUX POWER / 15A
7	SPARE FUSE / 10A
8	SPARE FUSE /10A
9	SPARE FUSE /15A
10	SPARE FUSE /15A

NORMAL SERVICE AND MAINTENANCE

IMPORTANT! READ BEFORE OPERATING MIXER.

INSPECT AND ADJUST

- **Augers** for residue buildup. Clean augers will result in a faster and more efficient mixing of commodities. Check augers and clean off residue buildup regularly.
- **Roller Chain Tighteners** so they apply sufficient spring tension to keep roller chains running smoothly (As a general rule the thickness of a nickel should fit between the spring coils). The chain will form grooves in the tightener blocks. These grooves help to keep the chains in proper alignment, and the blocks need not be turned unless the roller portion of the chain has worn into the block.
- **Roller Chains** for wear, proper alignment and tension. Adjust or replace if necessary. Roller chain connector links which pass over polyethylene tightener blocks must have the legs of the cotter pins trailing to the direction of rotation.
- **Safety Decals** for readability. If any safety decals are removed, obstructed, or otherwise not understandable, they should be replaced immediately. Keep all decals clean and visible.
- **Safety Shielding** to be sure all shielding is in place and functions properly. Replace all damaged or missing shielding immediately - see parts pages for more information.
- **Bolts and Set Screws** after a few hours of use and each month thereafter. Tighten if necessary.
- **Wheel Bolts** must be kept properly torqued. Damage to the rim may occur if the wheel bolts are not checked frequently.
- **Rain can accumulate** in the mixer if it is stored outside. If rain has accumulated, remove the drain plugs on the mixer bellies and allow the water to drain completely and replace the drain plugs before the next use.
- **In Freezing Weather** the mixer should be checked for snow and ice accumulation before operating the unit. If accumulation is detected, remove the drain plugs on the mixer bellies and thaw the mixer and allow it to drain completely. Make sure all obstructions are removed then replace the drain plugs before the next use of the mixer.
- **IMPORTANT! WHEN WELDING ON THIS UNIT:** Do NOT allow the current to flow through the bearings, roller chains, or load cells. Ground directly to the item being welded. ALWAYS disconnect battery cables and also the load cell cables from the scale indicator before welding.

LUBRICATION

- **The operator is responsible for routine maintenance and must carry out the following activities.**
- **It is extremely important that the following lubrication schedule be followed:** Bearings: use a good quality multipurpose grease. Replace all damaged or missing grease zerks immediately. Always clean zerks before using grease gun. Pump the grease in slowly until a slight bead forms around the bearing seals. Once a month check lines and connections on grease banks for leaks.
- **Oilbath Oil:** Use a good high quality universal oil. Use an oil that meets or exceeds hydraulic oil grade. Fill to a level that is just above the lowest roller chain link in the oilbath. Change yearly or whenever contaminated.
- **Planetary Oil:** After a brief operating period of about 100 hours (breaking in), change the oil in the gear units. Check that there are no metallic parts with unusual dimension in the magnetic plug of the gear unit. Change the oil in the gear unit while it is hot so that it is easier to drain. Subsequent oil changes will be made every 1000 hours of operation or, in any case, each year. Use synthetic ISO MOBIL SCH629 oil. (or equivalent ISO VG 220 gear oil) **DO NOT MIX OILS!** Periodically check the levels (about once a month) and top off if necessary. It is recommended to keep a chart that will be duly filled out and updated each time maintenance is performed. For long periods out of service, completely fill planetary with oil to prevent gears and bearings from corrosion.
- **Planetary Oil Change Instructions:** The planetary is equipped with oil level, breather, filler and drain plugs and their position changes according to the installation configuration. Unscrew the drain plug and the filler plug to help drain the oil from the gear unit. Once the oil has been emptied, replace the drain plug.
- **Filling instructions:** Unscrew the level and filler plugs and add gear oil (approximately 7 pints) until the oil flows out of the oil level hole. Replace the plugs. Turn the gear unit a few times to eliminate any air pockets and then check the level again.
- **Hydrostatic Oil:** Replace the hydrostatic oil every 1000 hours or annually (approximately 80 gallons).
- **Hydrostatic Oil Filter:** Replace the oil filter after the first 50 hours of operation. The filter should then be replaced after every 500 hours of operation or annually.
- **Before operating a new mixer,** the roller chains should be liberally lubricated and then the unit operated under a no-load condition. This break-in period will allow the roller chains to be thoroughly lubricated and thus minimize heat-up during operation.

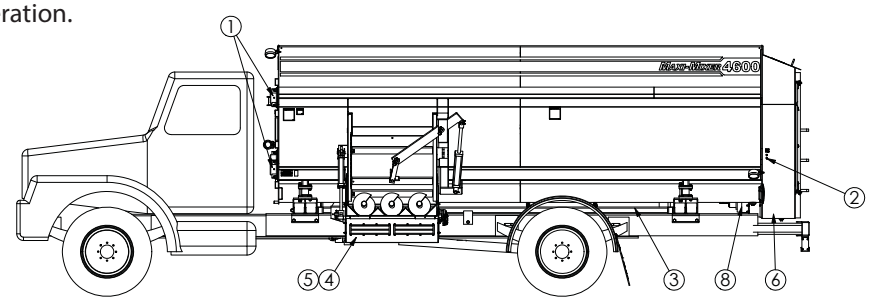

LUBRICATION				
ITEM	LUBRICATION INTERVAL	CAPACITY	OIL TYPE	LOCATION
1	8 HOURS		HIGH QUALITY MULTI PURPOSE GREASE	FRONT AUGER BEARINGS
2	8 HOURS			REAR AUGER BEARINGS
3	8 HOURS			DRIVELINE UNIVERSAL JOINTS
4	8 HOURS			DISCHARGE BEARINGS (IF APPLICABLE)
5	20 HOURS		CHAIN LUBE	DISCHARGE CHAINS (IF APPLICABLE) AND PIVOTS
6	50 HOURS	APPROX. 12 GALLONS	GOOD QUALITY HYDRAULIC OIL	OIL BATH OIL CHECK LEVEL (REPLACE ANNUALLY)
7	1000 HOURS	APPROX. 30 GALLONS	ISO 46 HYDRAULIC OIL OR EQUIVALENT	HYDRAULIC OIL CHECK LEVEL (REPLACE ANNUALLY)
8	1200 HOURS	7 PINTS	MOBIL SCH629 OR EQUIVALANT	PLANETARY SEE PLANETARY NOTES
FILTERS	CHANGE INTERVAL	FILTER PART#	LOCATION	
AUXILIARY CIRCUIT	FIRST 50 HRS THEN 500 HRS OR ANNUALLY	SAC# HYD1A9021 FORCE# F3653-10C NAPA# 1551 ZINGA# AE10	RIGHT HAND SIDE OF HYDRAULIC TANK ON RETURN LINE	
CHARGE PUMP	FIRST 20 HRS, NEXT 100 HOURS, THEN 250 HRS	SAC# HYDP176566	FRONT OF TRUCK BY HYDROSTATIC PUMPS	

PLANETARY NOTES

LUBRICATION

- The first oil change should be made after approximately 50-100 working hours. Before filling the gear case again, flush it with a fluid recommended for this purpose by the lubricant manufacturer. The oil should be changed when warm to prevent build up of sludge deposits. In cases of a heavy duty cycle (high loads, shocks, harsh environment) even shorter intervals should be kept between changes. Contact the manufacturer for more information.

- It is advisable to check the oil level at least once per month. If more than 10% of total oil capacity has to be added, then check for oil leaks. Do not mix oils of different types For wide temperature ranges, synthetic lubricants are recommended with EP additive (minimum viscosity index of 165, viscosity class VG 150 or VG320). Never mix mineral and synthetic oils. Failure to comply with these recommendations may result in premature wear and/or failure of the gear reducer or its components.

MAINTENANCE

- Periodically check to see that the bolts are properly torqued and the plugs (breather, sight, magnetic, and plain) are seated. While checking the breather, also make sure that it is free from debris. If necessary, remove the breather and flush it out with a cleaning solvent. Check the magnetic plugs and clean on a regular basis (normally performed during oil changes). Under normal operation of the gear reducer, the magnetic plugs will collect very fine particulates especially during the initial break-in period. If you should notice heavy deposits, contact the manufacturer or supplier.

- It is also advisable to make sure the gear reducer maintains proper alignment with the components directly involved with its operation. If the machine is stopped for a long period (two months or longer), it is necessary to rotate the input every couple weeks to lubricate the gears and bearings to protect them from corrosion. For longer periods out of service, the gear case should be completely filled with oil.

OIL SPECIFICATION

- **Oil Type:** Any oil, which meets EP (Extreme Pressure) Gear Lubricant Specification. EP 80 to 90 WT gear lube, Viscosity Index of 93 and a viscosity of 780 @ 100°F SUS and 76.7 @ 210° F SUS is recommended. Unit is filled with Mobil SHC629 synthetic at the factory.

- **Oil Change:** After initial 50 hours, thereafter every 1200 hours or 6 months, which ever comes first. These intervals may be modified depending on the actual operatinig conditions. If used on seasonal equipment, it is recommended that the oil be changed at the end of each season to remove moisture and corrosive contaminants.

- **Oil Fill Level:** Unit should be filled so that oil is visible in the sight gage mounted on the side, approximately half way up. If there is no sight gage the unit should be filled approximately half full, which can be checked by taking out the plug located on the side of the planetary, and filling until oil comes out.

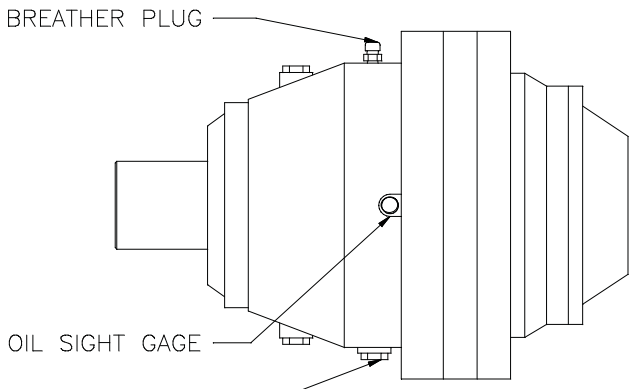

PLANETARY

DECAL LOCATION

Types of decals and safety signs with locations are shown in illustration below. Good safety requires that you familiarize yourself with the various decals, type of information provided, and the areas that require your awareness.

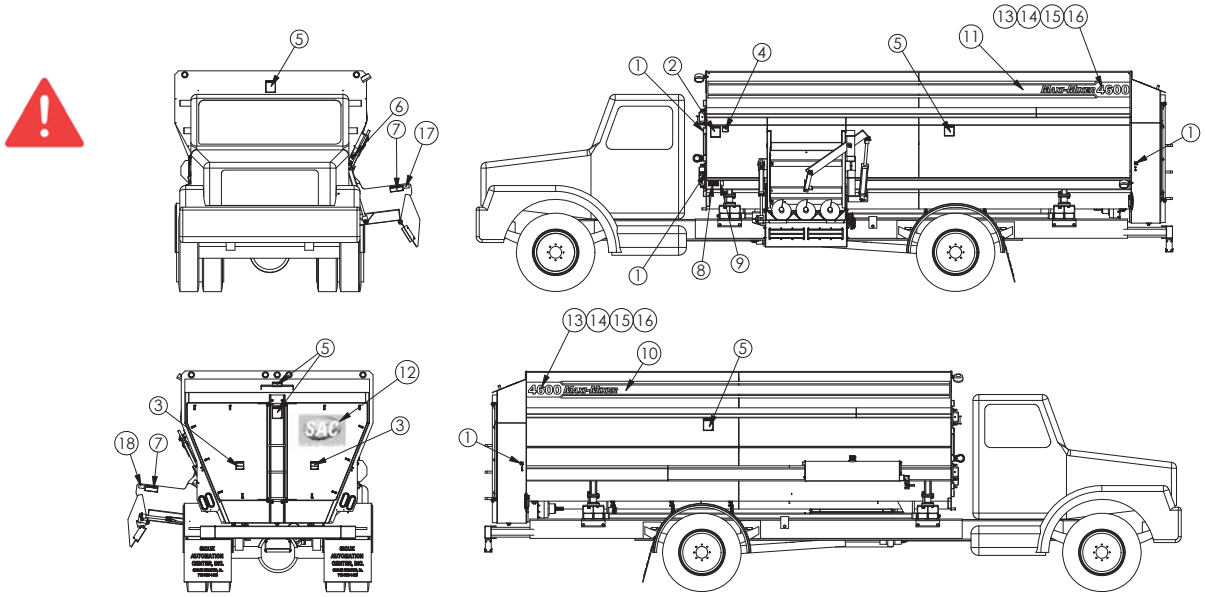

ITEM #	4500 QTY.	4600 QTY	4700 QTY	4900 QTY	PART #	DESCRIPTION
1	6	6	6	6	DEC102	DECAL,GRS,GUN,PICTURE
2	1	1	1	1	DEC106	DECAL,CAUTION,MAN,OWNER,5,6
3	2	2	2	2	DEC107	DECAL,WARNING,CHAIN,EXPOSED
4	1	1	1	1	DEC109	DECAL,CAUTION,WLD,3,3
5	5	5	5	5	DEC111	DECAL,DANGER,AUGER,5,6
6	1	1	1	1	DEC114	DECAL,DOOR,OPEN/CLOSE
7	2	2	2	2	DEC322	DECAL,WARNING CHUTE AREA
8	1	1	1	1	DEC375	DECAL,MODEL,SERIAL,SAC,2.75,5
9	1	1	1	1	DEC393	DECAL,FEMA,1.5,2.5
10	1	1	1	1	DEC458 NOTE 1	DECAL,4AUG,8.5,215.33,CS
11	1	1	1	1	DEC459 NOTE 1	DECAL,4AUG,8.5,215.33,SS
12	1	1	1	1	DEC626	DECAL,SAC,LOGO,GLOBE
13	2	-	-	-	DEC483 NOTE 1	DECAL,MAXI,4500,WHITE
14	-	2	-	-	DEC484 NOTE 1	DECAL,MAXI,4600,WHITE
15	-	-	2	-	DEC485 NOTE 1	DECAL,MAXI,4700,WHITE
16	-	-	-	2	DEC460 NOTE 1	DECAL,MAXI,4900,WHITE
17	1	1	1	1	STI702174	REFLCTR,RECT,AMBER
18	1	1	1	1	STI702175	REFLCTR,RECT,RED

NOTE 1: FOR UNITS WITH IMPLEMENTATION DATES PRIOR TO JUNE 2010, PLEASE REFER TO THE FOLLOWING REVISIONS TO THE DECAL BOM:

CHANGE THE FOLLOWING:					
4500 QTY.	4600 QTY	4700 QTY	4900 QTY	PART #	DESCRIPTION
0	0	0	0	DEC458	DECAL,4AUG, 8.5,215.33,CS
0	0	0	0	DEC459	DECAL,4AUG, 8.5,215.33,SS
0	-	-	-	DEC483	DECAL,MAXI,4500,WHITE
-	0	-	-	DEC484	DECAL,MAXI,4600,WHITE
-	-	0	-	DEC485	DECAL,MAXI,4700,WHITE
-	-	-	0	DEC460	DECAL,MAXI,4900,WHITE

ADD THE FOLLOWING:					
4500 QTY.	4600 QTY	4700 QTY	4900 QTY	PART #	DESCRIPTION
2	2	2	2	DEC154	SAC,LOGO,20.5H,24W
1	1	1	1	DEC158	DECAL,MAXI,6,108,RH
1	1	1	1	DEC159	DECAL,MAXI,6,108,LH
2	-	-	-	DEC275	DECAL,MAXI,4500,BLACK
-	2	-	-	DEC268	DECAL,MAXI,4600,BLACK
-	-	2	-	DEC276	DECAL,MAXI,4700,BLACK
-	-	-	2	DEC281	DECAL,MAXI,4900,BLACK

MON900436 4600 BASE ASSEMBLY
BILL OF MATERIALS

ITEM #	QTY	PART #	DESCRIPTION
1	3	BLT10X30MM	10MMX30MM BOLT
2	8	BLT12X112NC	1/2X1-1/2 BOLT
3	12	BLT12X7NF	1/2X7 G8 BOLT
4	20	BLT34X212NC	3/4X2-1/2 BOLT
5	40	BLT34X234NC	3/4X2-3/4 BOLT
6	4	BLT34X2NC	3/4X2 BOLT
7	4	BLT34X2NF	3/4X2 G8 BOLT
8	2	BLT516X34CNC	5/16X3/4 CARRIAGE BOLT
9	4	BURN12000305	4.5 SPROCKET RETAINER DISK
10	1	DEC375	MODEL/SERIAL # PLATE
11	1	DEC393	FEMA DECAL
12	1	HYDPMC9112	HYDRAULIC CYLINDER
13	4	MON101847	BEARING SLEEVE
14	2	MON101848	BEARING SLEEVE
15	4	MON101853	PLASTIC DISK
16	4	MON101854	PLASTIC DISK
17	2	MON101874	140-H ROLLER CHAIN
18	1	MON101875	100-H ROLLER CHAIN
19	1	MON101896	PLANETARY DRIVE
20	12	MON102032	SPACER
21	1	MON102073	DOOR PIVOT ARM
22	4	MON102147	BEARING SEAL
23	2	MON102437	STAINLESS STEEL FLANGE
24	2	MON102490	BEARING SLEEVE
25	2	MON102491	STEEL DISK
26	6	MON102492	NYLON DISK
27	2	MON102493	STAINLESS STEEL DISK
28	4	MON102494	STEEL DISK
29	1	MON103244 NOTE 1	100-H ROLLER CHAIN
30	1	MON700781 NOTE 1	BOTTOM AUGER
31	1	MON700784	TOP RH AUGER
32	1	MON700811	AUGER SHAFT WELDMENT
33	1	MON700812	AUGER SHAFT WELDMENT
34	1	MON700816	140-2 SPROCKET
35	2	MON700817	140 SPROCKET
36	1	MON700818	100 SPROCKET
37	2	MON700820	TOP RH SPROCKET
38	2	MON700821	AUGER FLANGE WELDMENT
39	3	MON700822	IDLER ARM
40	1	MON700823	CHAIN IDLER ARM
41	1	MON700828	4600 BODY WLD
42	1	MON700835	FLANGE BEARING
43	4	MON700836	FLANGE BEARING
44	1	MON700837	FLANGE BEARING
45	1	MON700840	SPROCKET
46	1	MON700846	DOOR POST
47	1	MON700847	RH OILBATH DOOR
48	1	MON700848	LH OILBATH DOOR
49	1	MON700907	DISCHARGE DOOR
50	1	MON700908	DOOR LINKAGE ARM
51	2	MON701059	FLANGE BEARING
52	1	MON701066 NOTE 1	TOP LH AUGER
53	1	MON701271 NOTE 1	BOTTOM RH AUGER
54	1	MON800308	END CAP
55	1	MON800531	MANUAL CANISTER
56	4	NUT12LOCKNC	1/2" LOCK NUT
57	4	NUT12NC	1/2" NUT
58	12	NUT12NF	1/2" G8 NUT
59	32	NUT34LOCKNC	3/4" LOCK NUT
60	32	NUT34NC	3/4" NUT
61	8	NUT38NC NOTE 1	3/8" NUT
62	2	NUT516LOCKNC	5/16" LOCK NUT
63	18	OILSHC629	GEARLUBE OIL
64	12	OSW830212	DOOR LATCH
65	350	OSW830848	WEATHERSTRIP
66	1	PFBL112PLUG	1-1/2" PIPE PLUG
67	2	PFBL2PLUG	2" PIPE PLUG
68	2	RC100HCON	100-H CONNECTOR LINK
69	2	RC140HCON	140-H CONNECTOR LINK
70	2	SAC73053 NOTE 1	IDLER
71	2	SAC73054	IDLER
72	2	SP10X34TS	#10X3/4" SELF-DRILLING SCREW
73	2	SPCP225	CYLINDER PIN
74	2	SPGH24	GREASE HOSE
75	2	SPGH36	GREASE HOSE
76	4	SPGZRK1644B	GREASE ZERK
77	4	SPGZRK618	GREASE ZERK
78	4	SPHKE38	TURNBUCKLE
79	1	SPMCK0300	SILICONE SEALANT
80	9	SPSCL1 NOTE 1	SHAFT COLLAR
81	2	SPSPR370	SPRING
82	2	SPSPR612	SPRING
83	3	WSH10LOCKMM	10MM LOCK WASHER
84	4	WSH12LOCK	1/2" LOCK WASHER
85	12	WSH12LOCKG8	1/2" LOCK WASHER
86	9	WSH1FLAT	1" FLAT WASHER
87	36	WSH34LOCK	3/4" LOCK WASHER
88	4	WSH38FLAT	3/8" FLAT WASHER

NOTE 1: FOR UNITS WITH AN IMPLEMENTATION DATE PRIOR TO JUNE 2010, PLEASE REFER TO THE FOLLOWING ADJUSTMENTS TO THE BOM:

CHANGE THE FOLLOWING:		
QTY	PART #	DESCRIPTION
0	MON103244	100-H ROLLER CHAIN (87P)
2	MON700781	BOTTOM LH AUGER
0	MON701066	TOP LH AUGER
0	MON701271	BOTTOM RH AUGER
0	NUT38NC	3/8" NUT
1	SAC73053	IDLER
11	SPSCL1	SHAFT COLLAR

ADD THE FOLLOWING:		
QTY	PART #	DESCRIPTION
3	MON101800	IDLER
1	MON101876	100-H ROLLER CHAIN (141P)
1	MON700783	TOP LH AUGER

NOTE 2: FOR UNITS WITH AN IMPLEMENTATION DATE PROR TO JUNE 2010, MON700828 BODY WELDMENT WAS MANUFACTURED TO REVISION M AND INCORPORATED DIFFERENT CHAIN AND IDLERS, REFER TO NOTE 1 ABOVE.

MON900436 4600 BASE ASSEMBLY

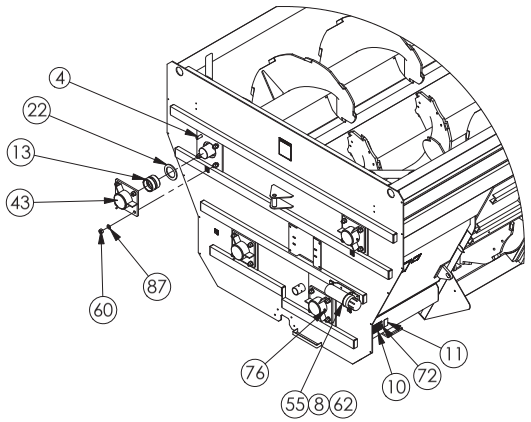

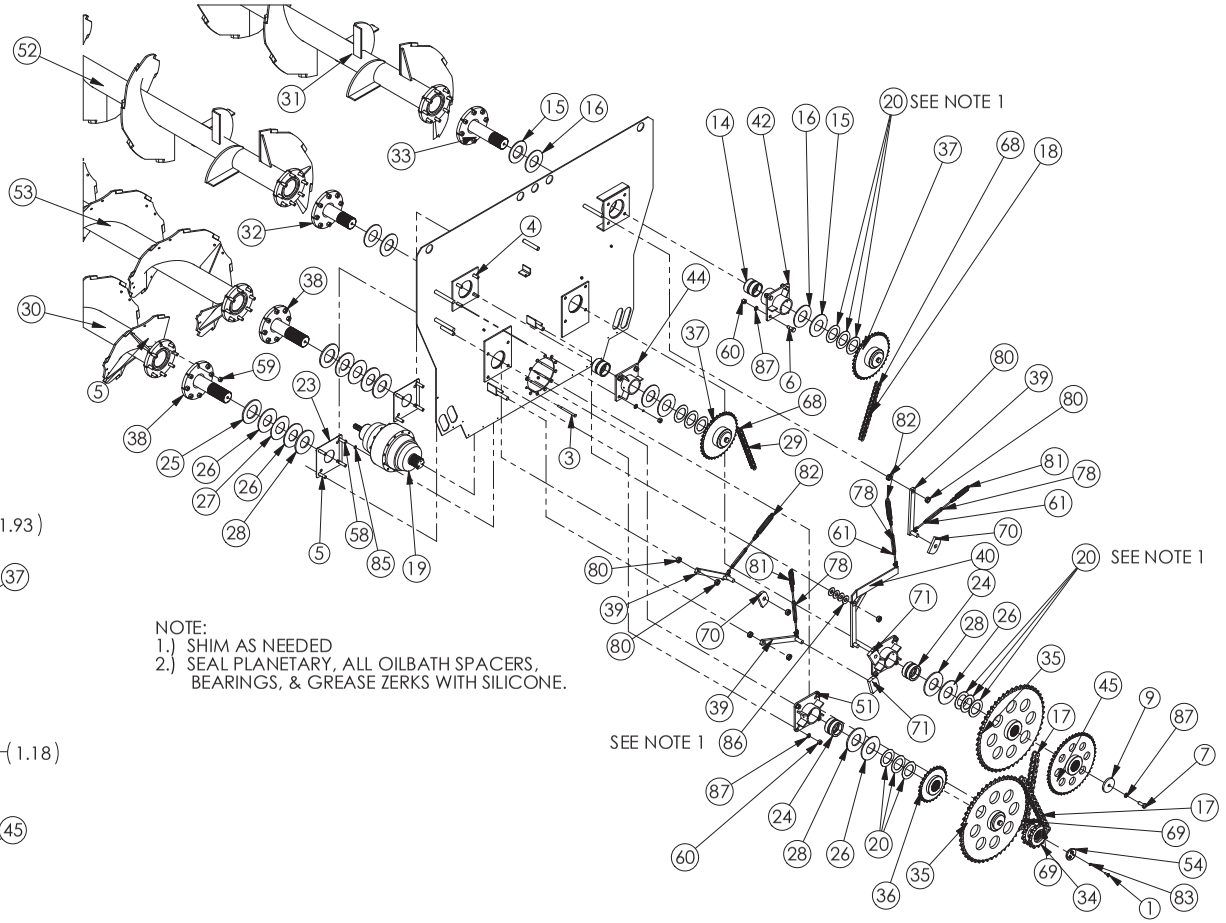

NOTE:
1.) SHIM AS NEEDED
2.) SEAL PLANETARY, ALL OILBATH SPACERS, BEARINGS, & GREASE ZERKS WITH SILICONE.

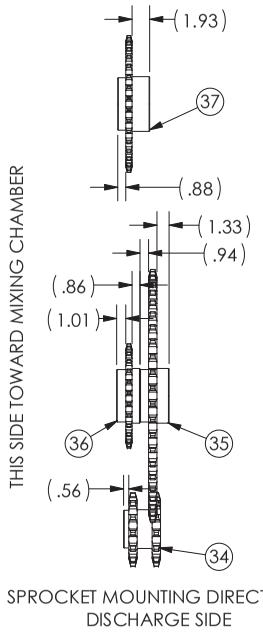

SPROCKET MOUNTING DIRECTIONS
DISCHARGE SIDE

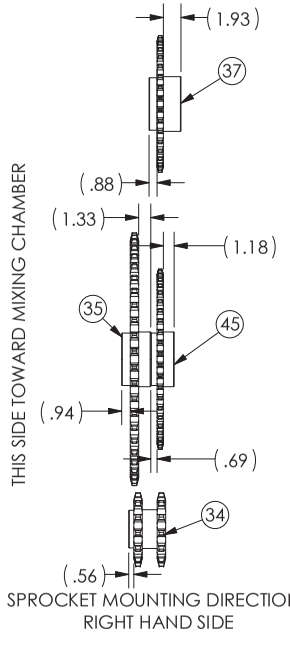

SPROCKET MOUNTING DIRECTIONS
RIGHT HAND SIDE

MON900436 4600 BASE ASSEMBLY

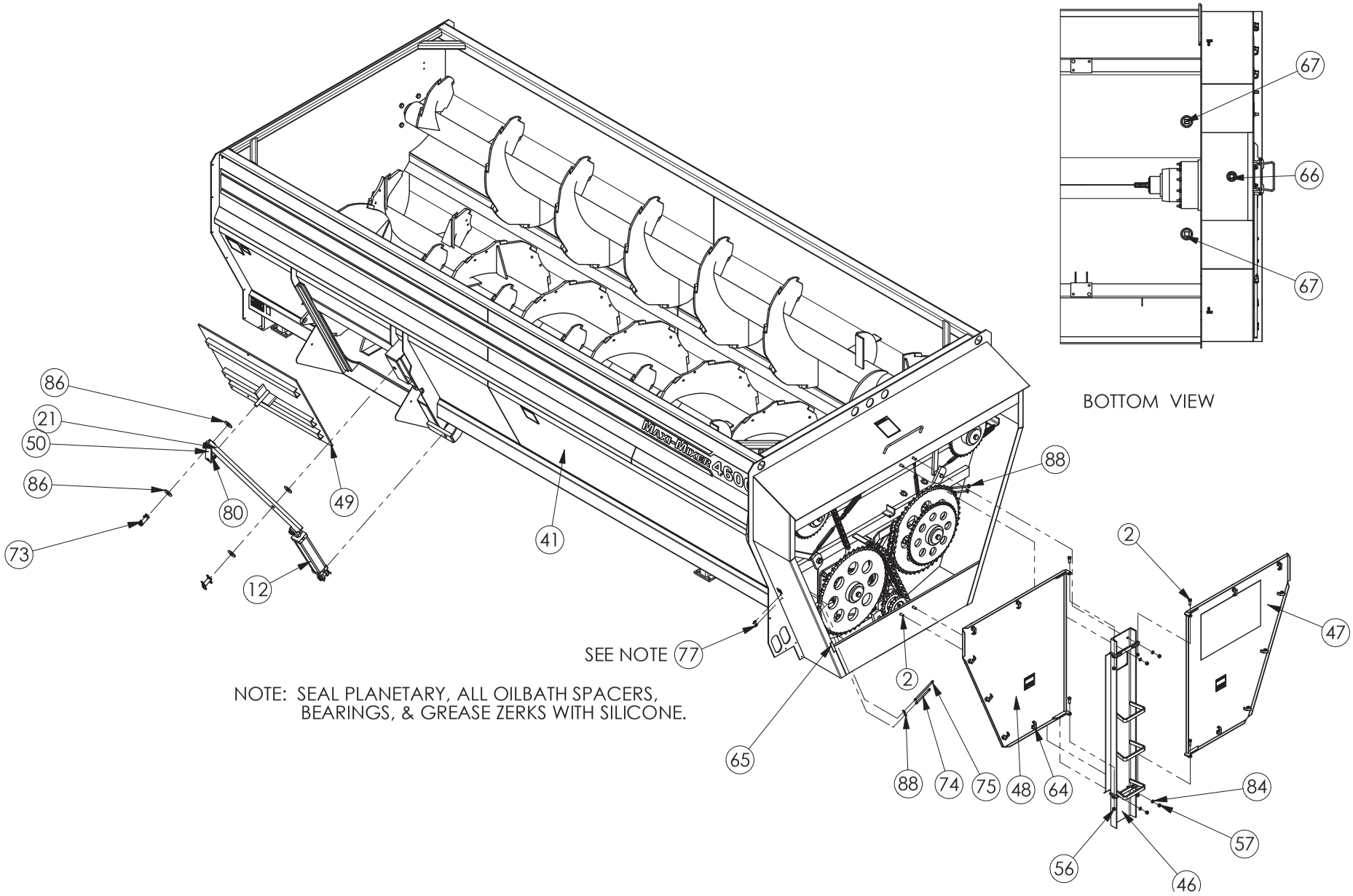

NOTE: SEAL PLANETARY, ALL OILBATH SPACERS, BEARINGS, & GREASE ZERKS WITH SILICONE.

NOTES

MON900478 FINAL ASSEMBLY

ITEM #	QTY	PART #	DESCRIPTION
1	12	BLT12X134NC	1/2X1-3/4 BOLT
2	6	BLT12X1NC	1/2X1 BOLT
3	16	BLT12X214NC	1/2X2-1/4 BOLT
4	3	BLT14X2NC	1/4X2 BOLT
5	7	BLT34X212NC	3/4X2-1/2 BOLT
6	1	BLT34X3NC	3/4X3 BOLT
7	4	BLT34X8NC	3/4X8 BOLT
8	2	BLT516X34NC	5/16X3/4 BOLT
9	3	BRG80MM4GR	BEARING FLANGE
10	3	BRG80MSC2	BEARING FLANGE
11	3	BRGHPS104TR	BEARING
12	4	DM100749	LOADCELL BRACKET
13	4	MON101834	LOADCELL BRACKET
14	3	MON101870	BEARING BRACKET
15	1	MON102075	DOOR GAUGE
16	4	MON102146	LOADCELL BRACKET
17	1	MON600157	MANUAL
18	1	MON700829	FRAME WELDMENT
19	3	MON700844	CHECK ROD
20	1	MON900436	4600 BASE ASSEMBLY
21	1	MON900475	LIGHT KIT
22	1	MON900482	ADJUSTABLE ROD
23	34	NUT12NC	1/2" NUT
24	3	NUT14LOCKNC	1/4" LOCK NUT

ITEM #	QTY	PART #	DESCRIPTION
25	4	NUT34JAMNC	3/4" JAM NUT
26	8	NUT34LOCKNC	3/4" LOCK NUT
27	4	NUT34NC	3/4" NUT
28	2	NUT516NC	5/16" NUT
29	50	SPCABLETIEHVY	CABLE TIE
30	100	SPCABLETIEMED	CABLE TIE
31	96	STI700221	46 HYDRAULIC OIL
32	28	WSH12FLAT	1/2" FLAT WASHER
33	34	WSH12LOCK	1/2" LOCK WASHER
34	8	WSH34FLATG8	3/4" FLAT G8 WASHER
35	2	WSH516FLAT	5/16" FLAT WASHER

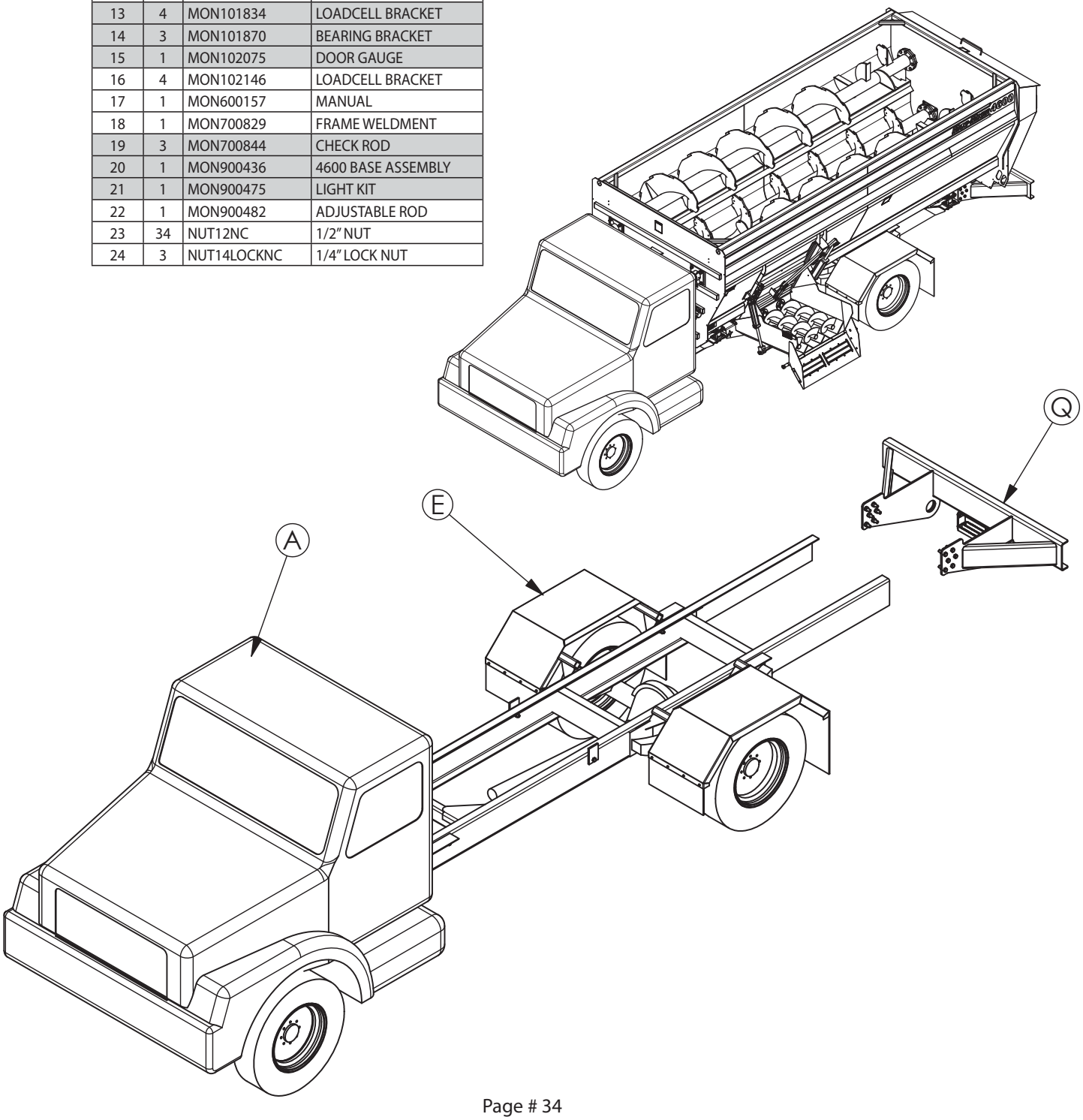

MON900478 FINAL ASSEMBLY

SALES DRIVEN PACKAGES				
	ITEM #	QTY	PART #	DESCRIPTION
CHASSIS	A	1	CHASSIS	138 CAB TO AXLE CHASSIS
DISCHARGE PACKAGE	B	1	MON900505	31" 3 AUGER DISCHARGE
		1	MON900506	39" 3 AUGER DISCHARGE
		1	MON900507	48" 3 AUGER DISCHARGE
		1	MON900837	39" SLAT DISCHARGE
		1	MON900845	48" SLAT DISCHARGE
		1	MON901004	34" SLAT DISCHARGE
HYDRAULIC PACKAGE	C	1	MON900501	AUGER DISCHARGE HYD ASSEMBLY
		1	MON900858-2	SLAT DISCHARGE HYD ASSEMBLY W/FLIP
		1	MON901011-1	AUX 4 AUGER HYDRO DRIVE KIT
DRIVE PACKAGE	D	1	SAC26016	PTO DRIVE ASSEMBLY
		1	MON901010-1	4 AUGER TRUCK HYDRO ASSEMBLY
FENDER PACKAGE	E	1	MON900979	TANDEM FENDER KIT
		1	MON900987	SINGLE AXLE FENDER KIT
		1	MON900988	TANDEM POLY FENDER KIT
		1	MON900989	SINGLE AXLE POLY FENDER KIT
SCALE KIT	F	1	SAC75999	DS REMOTE TRUCK SCALE KIT
OPTIONAL ITEMS				
RUBBER EXTENSION	G	1	MON900634	4600 8" RUBBER TOP EXTENSION
ROUHAGE KIT	H	1	SAC26113	SCALLOP KNIFE KIT
RAM PACKAGE	J	1	MON900998	PTO REMOTE CONTROL KIT
		1	MON901000-1	HYDRO REMOTE CONTROL KIT
CHASSIS PREP PACKAGES				
MIXER MOUNT KIT	K	1	MON901053	4600 PTO CHASSIS PREP KIT
		1	MON901054	4600 HYDRO CHASSIS PREP KIT
CONTROL CONSOLE	L	1	MON901027	PTO CONSOLE KIT
		1	MON901029	HYDRO CONSOLE KIT
OPTIONAL SALES ITEMS				
PTO DRIVE KIT	M	1	MON901050	HDR PTO DRIVE KIT
HYDRO DRIVE KIT	N	1	MON901049-1	4600 PUMP KIT
SPRING KIT	P	1	MON900983	SINGLE AXLE STRAIGHT SPRING KIT
		1	MON900984	SINGLE AXLE TAPERED SPRING KIT
HD REAR BUMPER	Q	1	MON900876	HEAVY DUTY REAR BUMPER KIT
FRONT BUMPER	R	1	SAC56058	ROLLER BUMPER ASSEMBLY
		1	SAC56078	EXTENSION BUMPER ASSEMBLY
		1	VM900203	FEPTO ROLLER BUMPER ASSEMBLY
		1	VM900205	FEPTO EXTENSION BUMPER ASSEMBLY
REMOTE AC BRACKET	S	1	MON900856	REMOTE AC CONDENSOR BRACKET
DRIVELINE DROPBOX	T	1	MON900789	GEAR REDUCTION GEARBOX KIT
REVERSIBLE FAN	U	1	SAC56164	REVERSIBLE FAN CONTROL KIT
CENTRI PRECLEANER	V	1	MON900836	KW T300 AIR PRECLEANER KIT
		1	MON900976	KW T370 AIR PRECLEANER KIT
		1	MON900978	MACK 14 AIR PRECLEANER KIT
		1	MON901040	IH 7500 AIR PRECLEANER KIT
		1	MON901057	STERLING AIR PRECLEANER KIT
DRIVELINE ADAPTER	W	1	VM600029	VM CHASSIS OPTION KIT
FRONT BUMPER MOUNTS	X	2	SAC56102	KW BUMPER MOUNT KIT
		2	SAC75974	PETE BUMPER MOUNT KIT
FRAME CROSSMEMBER	Y	2	SAC60901	KW 2007 CAB CROSSMEMBER SUPPORT KIT

MON900478 FINAL ASSEMBLY

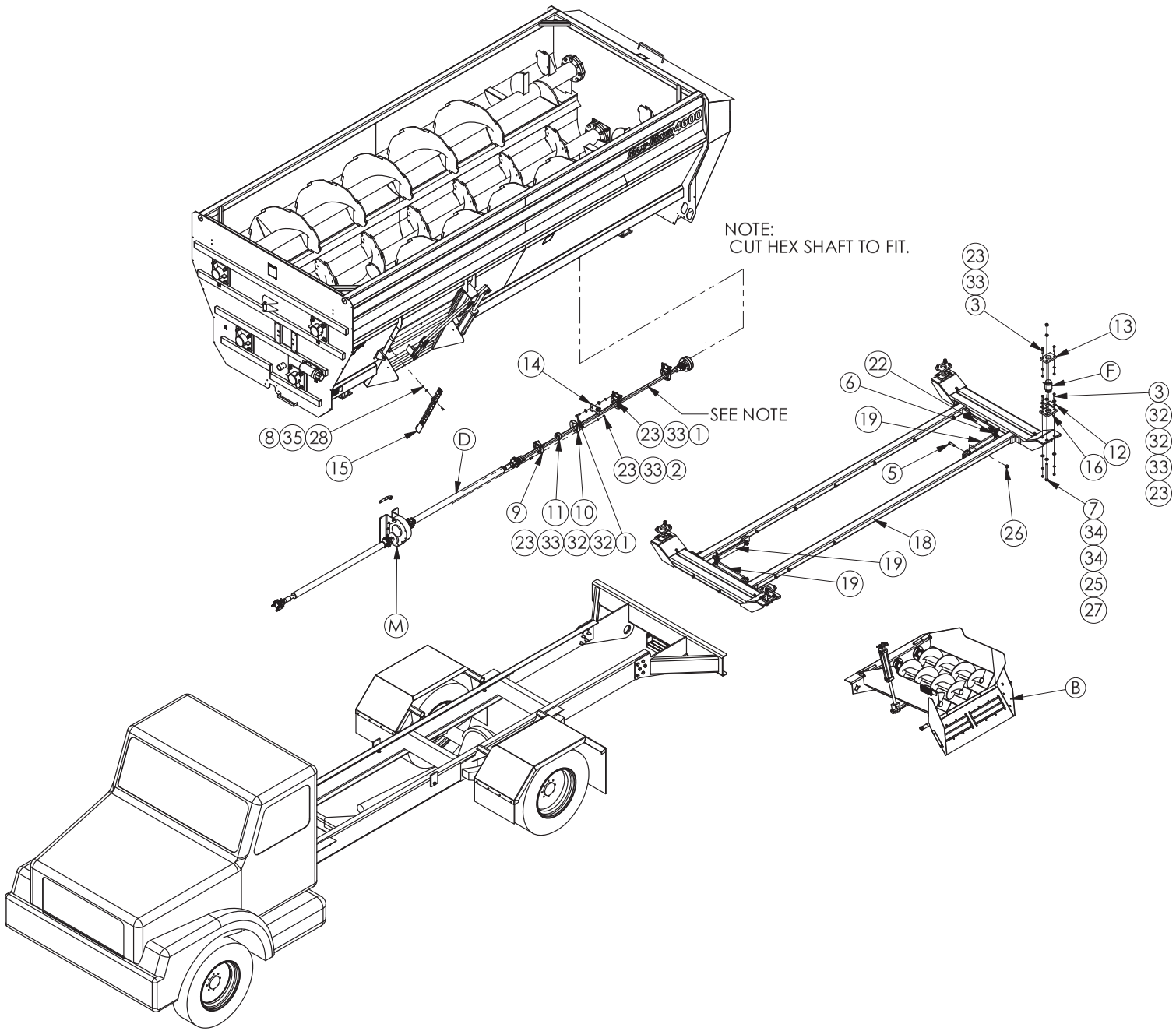

MON900478 FINAL ASSEMBLY

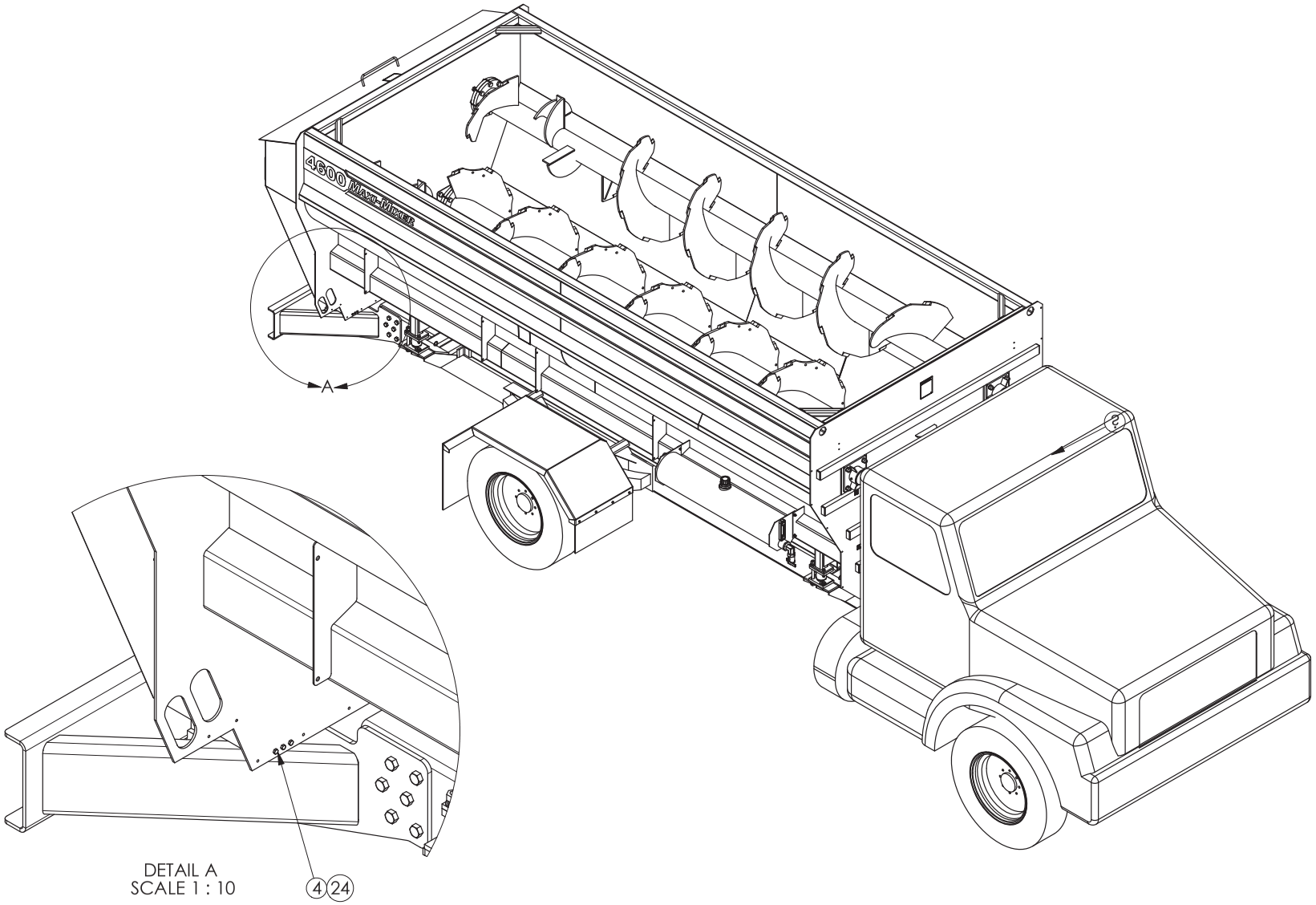

MON700781 BOTTOM LEFT HAND AUGER

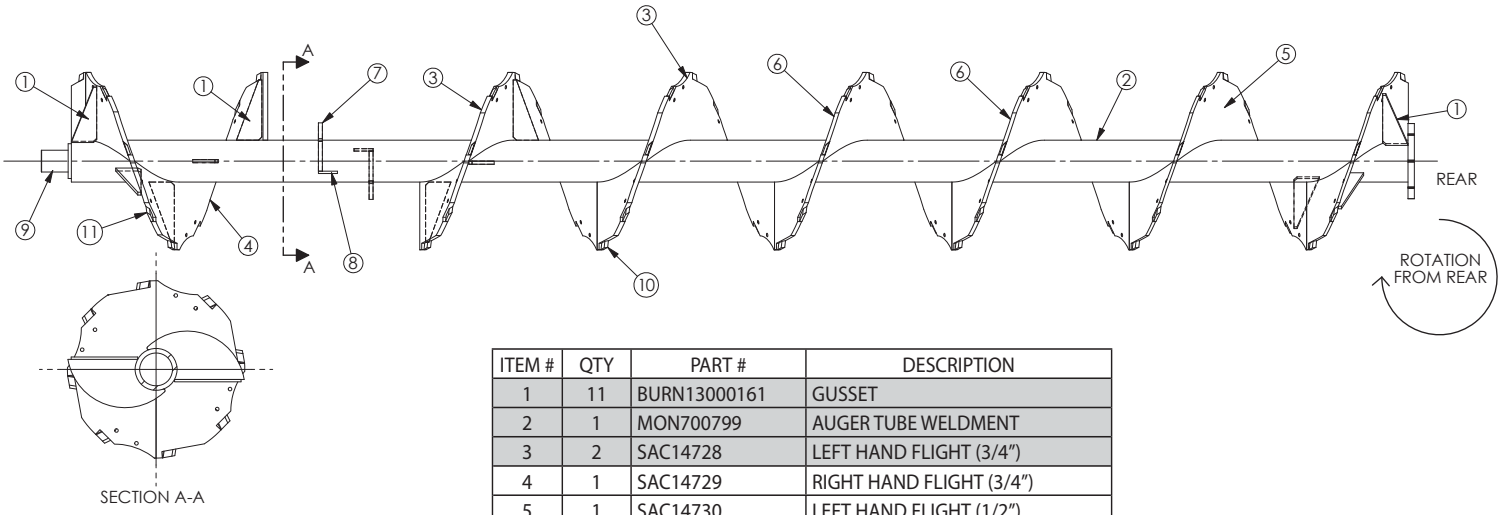

ITEM #	QTY	PART #	DESCRIPTION
1	11	BURN13000161	GUSSET
2	1	MON700799	AUGER TUBE WELDMENT
3	2	SAC14728	LEFT HAND FLIGHT (3/4")
4	1	SAC14729	RIGHT HAND FLIGHT (3/4")
5	1	SAC14730	LEFT HAND FLIGHT (1/2")
6	2	SAC14844	LEFT HAND FLIGHT (5/8)
7	2	SAC26031	PADDLE KNIFE
8	2	SAC26084	PADDLE
9	1	SAC26118	SHAFT WELDMENT
10	40	SAC73308	LEFT HAND AUGER KNIFE
11	9	SAC73309	RIGHT HAND AUGER KNIFE

MON701271 BOTTOM RIGHT HAND AUGER

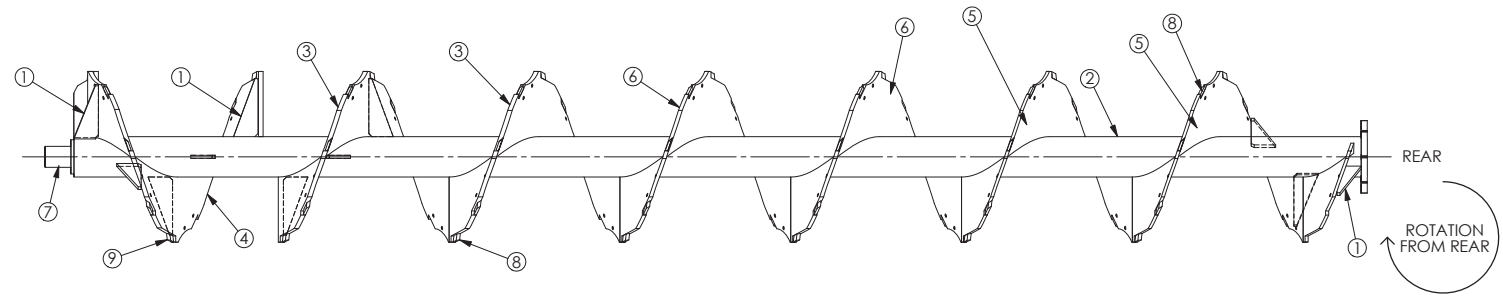

ITEM #	QTY	PART #	DESCRIPTION
1	11	BURN13000161	GUSSET
2	1	MON700799	AUGER TUBE WELDMENT
3	2	SAC14728	LEFT HAND FLIGHT (3/4")
4	1	SAC14729	RIGHT HAND FLIGHT (3/4")
5	2	SAC14730	LEFT HAND FLIGHT (1/2")
6	2	SAC14844	LEFT HAND FLIGHT (5/8)
7	1	SAC26118	SHAFT WELDMENT
8	48	SAC73308	LEFT HAND AUGER KNIFE
9	9	SAC73309	RIGHT HAND AUGER KNIFE

UNITS MANUFACTURED PRIOR TO 6/10/2010 HAD 2 IDENTICAL BOTTOM AUGERS: MON700781

AUGERS

MON701066 TOP LEFT HAND AUGER

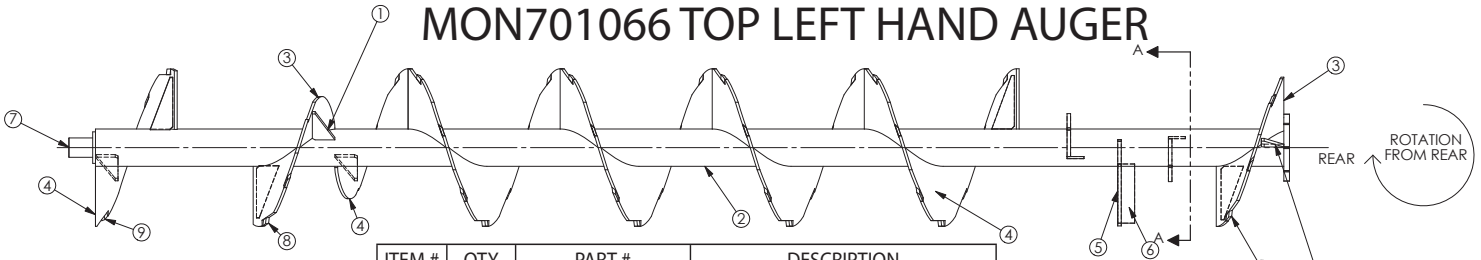

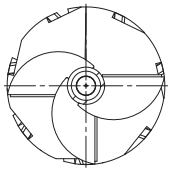

ITEM #	QTY	PART #	DESCRIPTION
1	8	BURN13000161	GUSSET
2	1	MON700799	AUGER TUBE WELDMENT
3	2	SAC14726	LEFT HAND FLIGHT
4	5	SAC14727	RIGHT HAND FLIGHT
5	3	SAC26031	PADDLE KNIFE
6	3	SAC26084	PADDLE
7	1	SAC26117	SHAFT WELDMENT
8	5	SAC73308	LEFT HAND AUGER KNIFE
9	33	SAC73309	RIGHT HAND AUGER KNIFE

MON700783 COUNTER CLOCK-WISE TOP LEFT HAND AUGER*

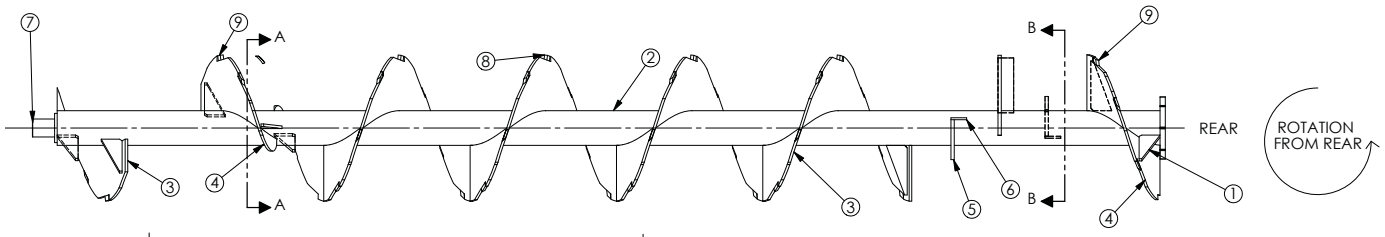

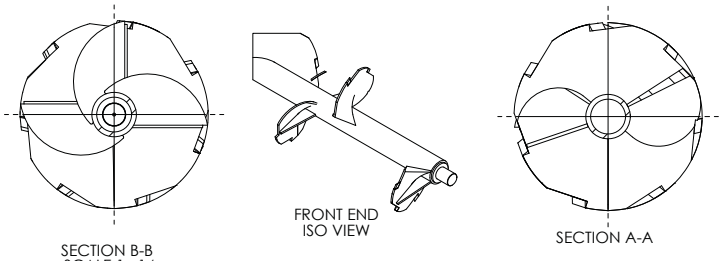

*UNITS MANUFACTURED PRIOR TO 6/10/2010

ITEM #	QTY	PART #	DESCRIPTION
1	8	BURN13000161	GUSSET
2	1	MON700799	AUGER TUBE WELDMENT
3	6	SAC14726	LEFT HAND FLIGHT
4	2	SAC14727	RIGHT HAND FLIGHT
5	3	SAC26031	PADDLE KNIFE
6	3	SAC26084	PADDLE
7	1	SAC26118	SHAFT WELDMENT
8	31	SAC73308	LEFT HAND AUGER KNIFE
9	5	SAC73309	RIGHT HAND AUGER KNIFE

MON700784 TOP RIGHT HAND AUGER

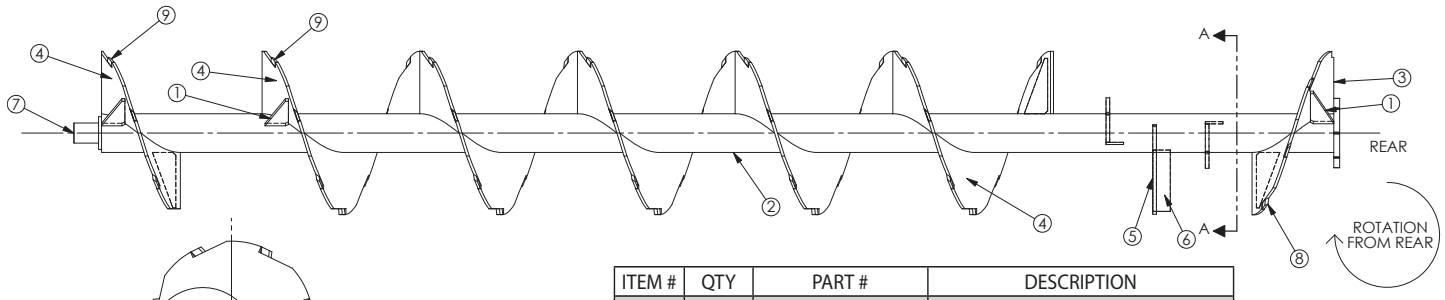

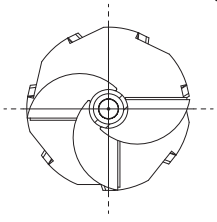

ITEM #	QTY	PART #	DESCRIPTION
1	6	BURN13000161	GUSSET
2	1	MON700799	AUGER TUBE WELDMENT
3	1	SAC14726	LEFT HAND FLIGHT
4	5	SAC14727	RIGHT HAND FLIGHT
5	3	SAC26031	PADDLE KNIFE
6	3	SAC26084	PADDLE
7	1	SAC26118	SHAFT WELDMENT
8	3	SAC73308	LEFT HAND AUGER KNIFE
9	30	SAC73309	RIGHT HAND AUGER KNIFE

SAC26112 AUGER ROUGHAGE KIT

ITEM #	QTY	PART #	DESCRIPTION
1	32	BLT12X112SFH	1/2X1-1/2 SFH BOLT
2	32	NUT12LOCKNF	1/2" LOCK NUT FINE THD
3	4	SAC73067	RH AUGER KNIFE
4	12	SAC73068	LH AUGER KNIFE

NOTES:
1. AUGER SHOWN IS FOR REFERENCE PURPOSES ONLY.
2. KIT PROVIDES ENOUGH PARTS FOR BOTH BOTTOM AUGERS.
3. 2 KNIVES PER AUGER ON RH FLIGHT, 6 KNIVES PER AUGER ON LH FLIGHT.
4. ALL KNIVES TO BE ON PRODUCT FLOW SIDE OF FLIGHTING.

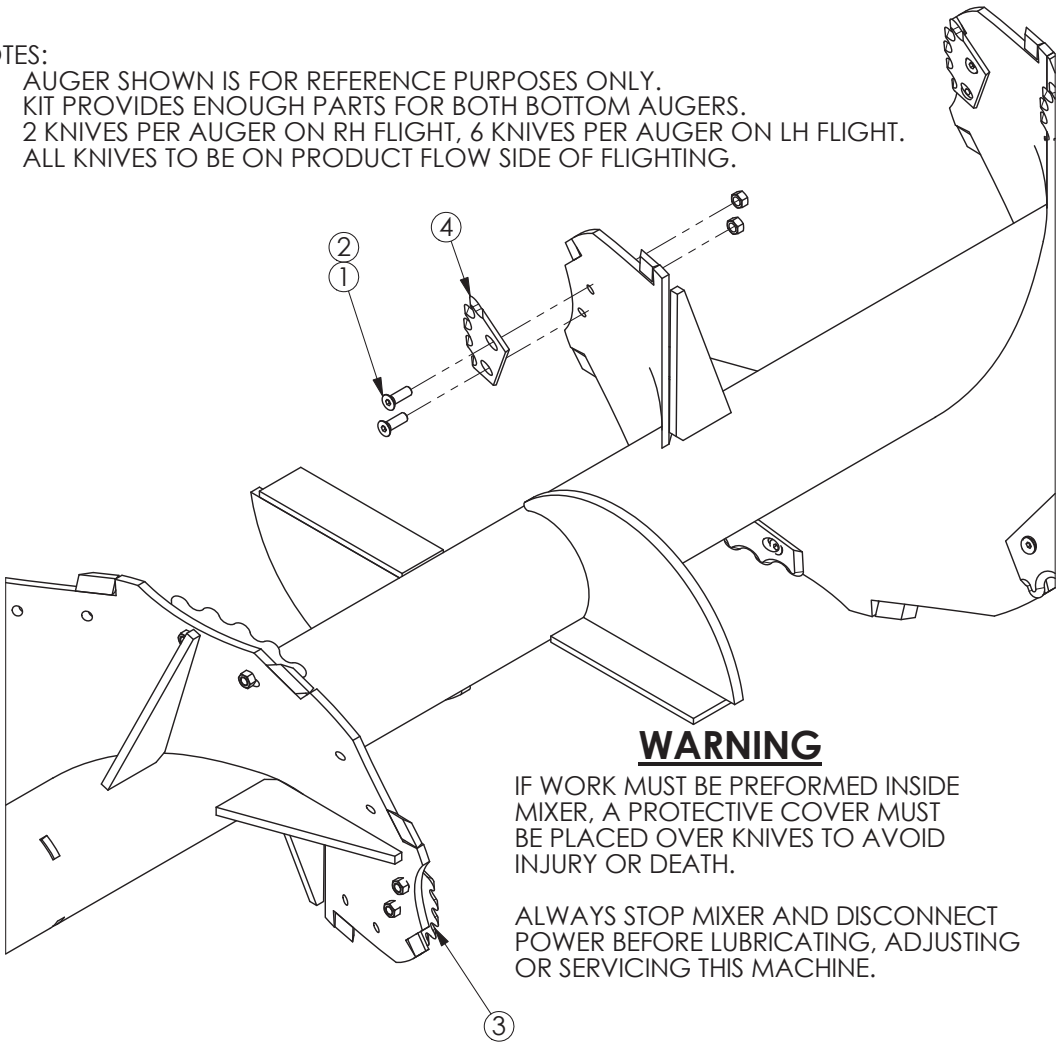

WARNING

IF WORK MUST BE PREFORMED INSIDE MIXER, A PROTECTIVE COVER MUST BE PLACED OVER KNIVES TO AVOID INJURY OR DEATH.

ALWAYS STOP MIXER AND DISCONNECT POWER BEFORE LUBRICATING, ADJUSTING OR SERVICING THIS MACHINE.

MON900634 BELT EXTENSION KIT

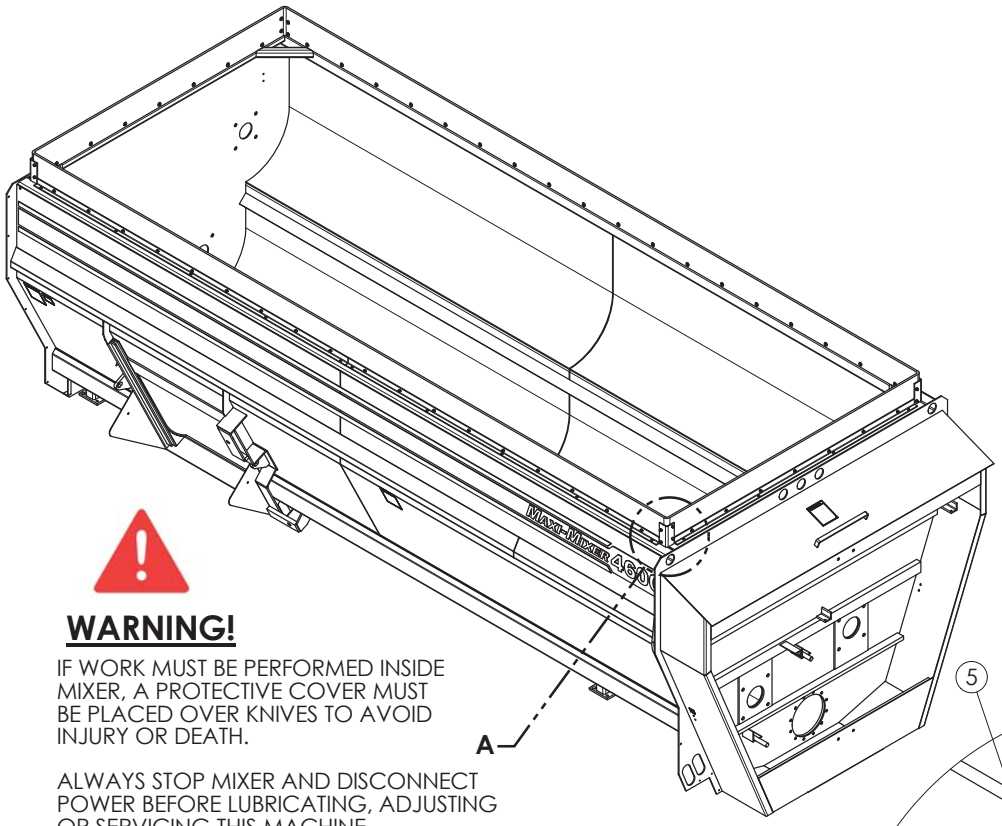

WARNING!

IF WORK MUST BE PERFORMED INSIDE MIXER, A PROTECTIVE COVER MUST BE PLACED OVER KNIVES TO AVOID INJURY OR DEATH.

ALWAYS STOP MIXER AND DISCONNECT POWER BEFORE LUBRICATING, ADJUSTING OR SERVICING THIS MACHINE.

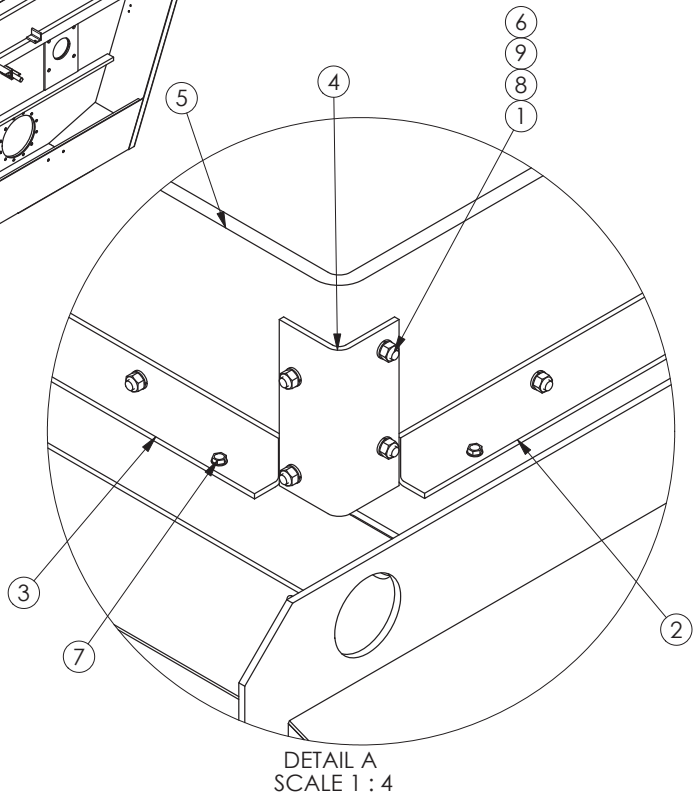

DETAIL A
SCALE 1 : 4

INSTALLATION INSTRUCTIONS

1. LAYOUT ANGLE MOUNTS (MON102407 & MON102408) AS REQUIRED TO ALLOW THE INSIDE EDGE OF BELTING TO BE FLUSH WITH THE INSIDE EDGE OF MIXING CHAMBER.
2. SECURE IN PLACE USING SELF-TAPPING SCREWS. (SP14X1TS)
3. MEASURE AND CUT LENGTHS OF RUBBER EXTENSION (MON800441) FOR FRONT, REAR, & SIDES.
4. CLAMP EXTENSION (MON800441) TO ANGLE MOUNTS (MON102407 & MON102408) & DRILL 3/8" HOLES AS REQUIRED.
5. SECURE WITH BOLTS, FLAT, & LOCK WASHERS. (BLT516X114NC, WSH516FLAT, & WSH516LOCK)
6. INSTALL CORNER ANGLE MOUNTS (MON102409) WITH SAME PROCEDURE IN STEPS 4 & 5.

ITEM #	QTY	PART #	DESCRIPTION
1	66	BLT516X114NC	5/16X1-1/4 BOLT
2	2	MON102407	SHORT EXTENSION MOUNT
3	4	MON102408	LONG EXTENSION MOUNT
4	4	MON102409	CORNER MOUNT
5	596	MON800441	BELTING
6	66	NUAT516NC	5/16" NUT
7	28	SPO14X1TS	1/4X1 TAPPING SCREW
8	66	WSH516FLAT	5/16" FLAT WASHER
9	66	WSH516LOCK	5/16" LOCK WASHER

DISCHARGE ASSEMBLIES

MON900505 31" 3 AUGER DISCHARGE W/FLIP CHUTE

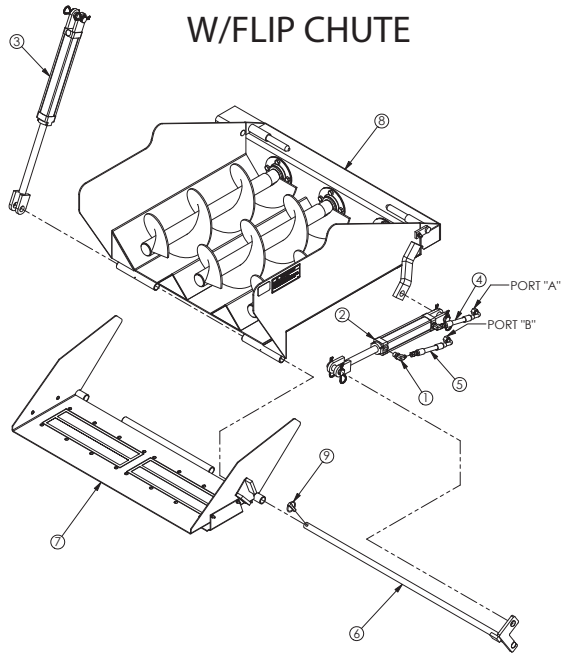

ITEM #	QTY	PART #	DESCRIPTION
1	2	HYD6801-6-8	HYDRAULIC ELBOW FITTING
2	1	HYDPMC8408	8" HYDRAULIC CYLINDER
3	1	HYDPMC9012	12" HYDRAULIC CYLINDER
4	1	MON700944	HYDRAULIC HOSE
5	1	MON700994	HYDRAULIC HOSE
6	1	SAC74174	PIVOT ROD
7	1	SAC75955	FLIP CHUTE ASSEMBLY
8	1	SAC75957	DISCHARGE ASSEMBLY
9	1	SPLPN71614	LYNCH PIN

MON900509 31" 3 AUGER DISCHARGE W/O FLIP CHUTE

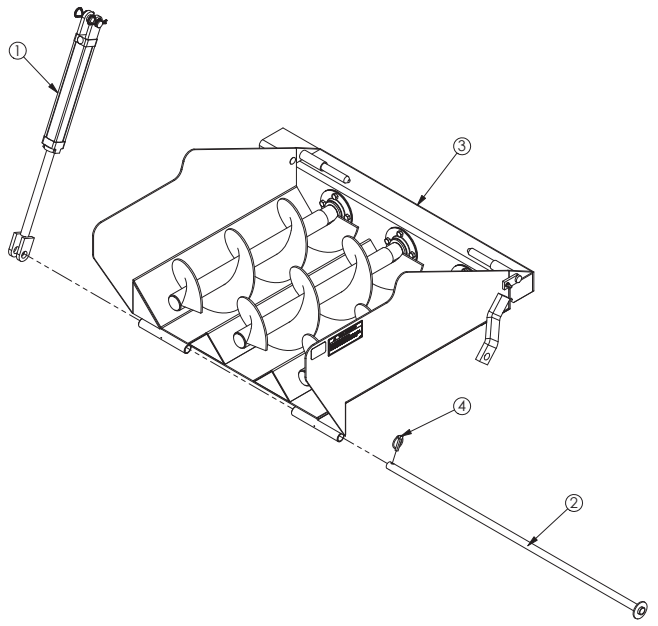

ITEM #	QTY	PART #	DESCRIPTION
1	1	HYDPMC9012	12" HYDRAULIC CYLINDER
2	1	SAC74250	CYLINDER PIN
3	1	SAC75957	DISCHARGE ASSEMBLY
4	1	SPLPN71614	LYNCH PIN

SAC75957 31" 3 AUGER DISCHARGE SHELL

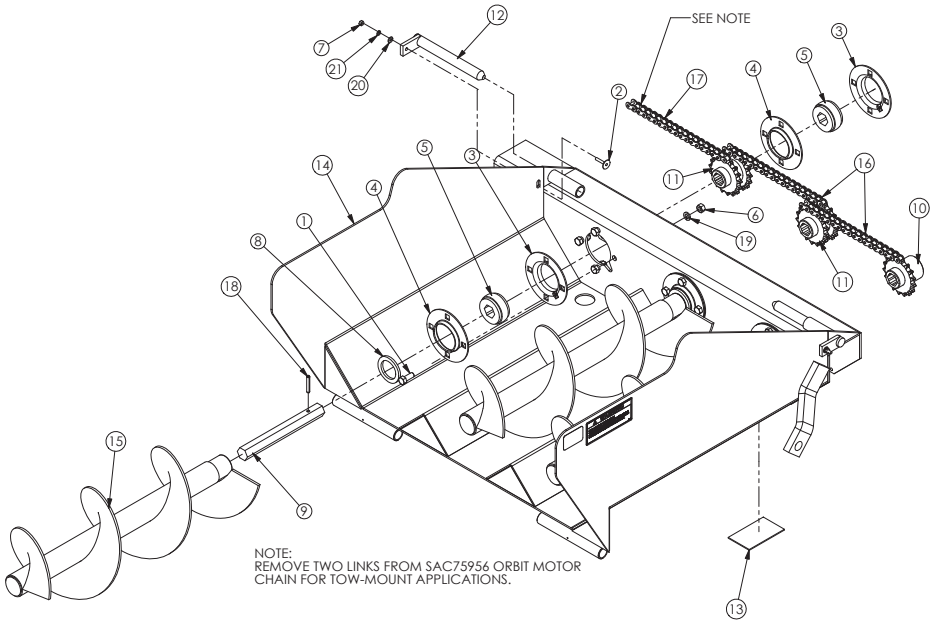

ITEM #	QTY	PART #	DESCRIPTION
1	24	BLT12X114NC	1/2X1-1/4 BOLT
2	2	BLT14X112EL	1/4X1-1/2 ELEVATOR BOLT
3	6	BRG80M-M4GR45	GREASABLE BEARING FLANGE
4	6	BRG80MSC2	BEARING FLANGE
5	6	BRGHPS104TR	BEARING
6	24	NUT12NC	1/2" NUT
7	2	NUT14NC	1/4" NUT
8	3	SAC73055	BEARING SEAL
9	3	SAC73563	HEX SHAFT
10	1	SAC74152	SPROCKET
11	2	SAC74153	DOUBLE SPROCKET
12	2	SAC74170	HINGE PIN
13	3	SAC74172	DRAIN DOOR
14	1	SAC74175	DISCHARGE SHELL WELDMENT
15	3	SAC74176	AUGER WELDMENT
16	2	SAC75953	60 ROLLER CHAIN (50P)
17	1	SAC75956	60 ROLLER CHAIN (52P)
18	3	SPRP516X2	5/16X2 ROLL PIN
19	24	WSH12LOCK	1/2" LOCK WASHER
20	2	WSH14FLAT	1/4" FLAT WASHER
21	2	WSH14LOCK	1/4" LOCK WASHER

DISCHARGE ASSEMBLIES

MON900506 39" 3 AUGER DISCHARGE W/ FLIP CHUTE

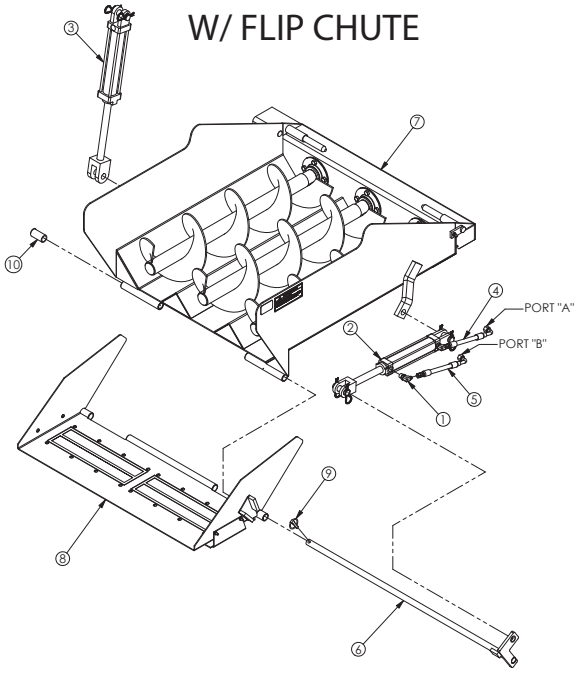

ITEM #	QTY	PART #	DESCRIPTION
1	2	HYD6801-6-8	HYDRAULIC ELBOW FITTING
2	1	HYDPMC8408	8" HYDRAULIC CYLINDER
3	1	HYDPMC8410	10" HYDRAULIC CYLINDER
4	1	MON700944	HYDRAULIC HOSE
5	1	MON700994	HYDRAULIC HOSE
6	1	SAC74174	PIVOT ROD
7	1	SAC75954	DISCHARGE ASSEMBLY
8	1	SAC75955	FLIP CHUTE ASSEMBLY
9	1	SPLPN71614	LYNCH PIN
10	1	STI511051	SPACER TUBE

MON900510 39" 3 AUGER DISCHARGE W/O FLIP CHUTE

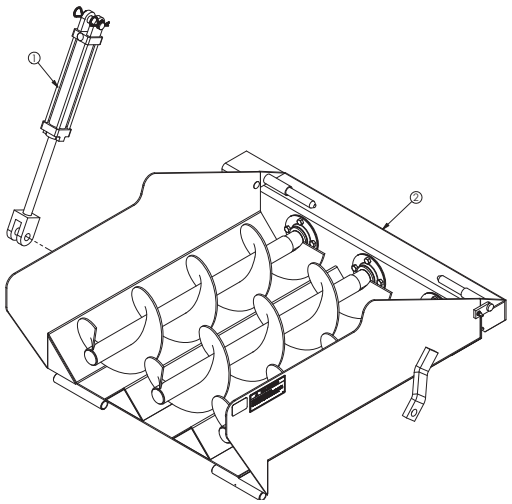

ITEM #	QTY	PART #	DESCRIPTION
1	1	HYDMC8410	10" HYDRAULIC CYLINDER
2	1	SAC75954	DISCHARGE ASSEMBLY

SAC75954 39" 3 AUGER DISCHARGE SHELL

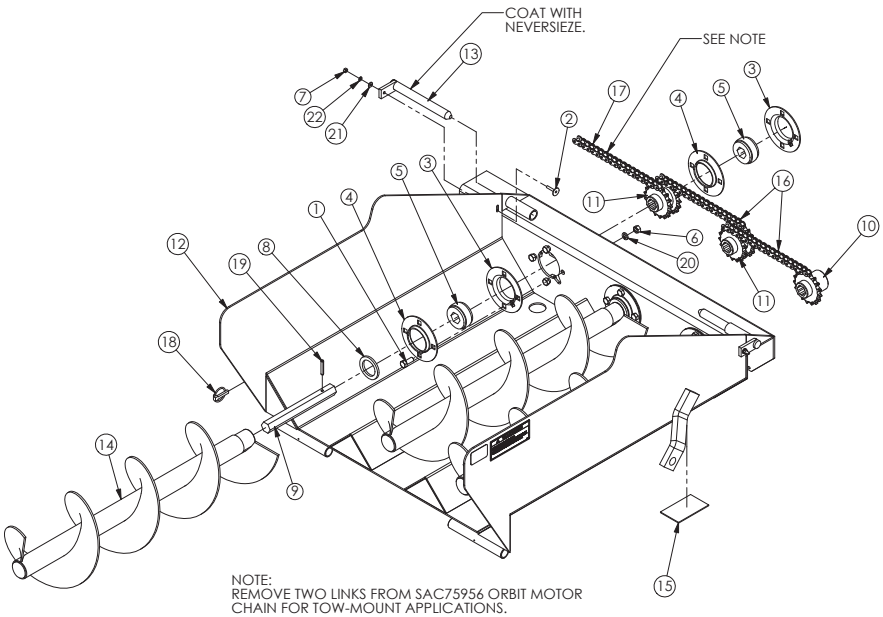

ITEM #	QTY	PART #	DESCRIPTION
1	24	BLT12X114NC	1/2X1-1/4 BOLT
2	2	BLT14X112EL	1/4X1-1/2 ELEVATOR BOLT
3	6	BRG80MM4GR45	GREASABLE BEARING FLANGE
4	6	BRG80MSC2	BEARING FLANGE
5	6	BRGHPS104TR	BEARING
6	24	NUT12NC	1/2" NUT
7	2	NUT14NC	1/4" NUT
8	3	SAC73055	BEARING SEAL
9	3	SAC73563	HEX SHAFT
10	1	SAC74152	SPROCKET
11	2	SAC74153	DOUBLE SPROCKET
12	1	SAC74169	DISCHARGE SHELL WELDMENT
13	2	SAC74170	HINGE PIN
14	3	SAC74171	AUGER WELDMENT
15	3	SAC74172	DRAIN DOOR
16	2	SAC75953	60 ROLLER CHAIN (50P)
17	1	SAC75956	60 ROLLER CHAIN (52P)
18	1	SPLPN71614	LYNCH PIN
19	3	SPRP516X2	5/16X2 ROLL PIN
20	24	WSH12LOCK	1/2" LOCK WASHER
21	2	WSH14FLAT	1/4" FLAT WASHER
22	2	WSH14LOCK	1/4" LOCK WASHER

DISCHARGE ASSEMBLIES

MON900507 48" 3 AUGER DISCHARGE W/ FLIP CHUTE

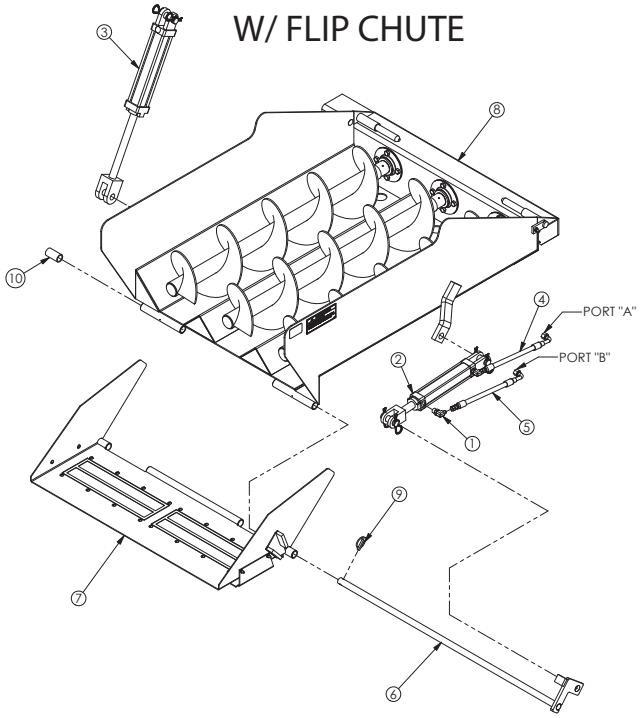

ITEM #	QTY	PART #	DESCRIPTION
1	2	HYD6801-6-8	HYDRAULIC ELBOW FITTING
2	1	HYDPMC8408	8" HYDRAULIC CYLINDER
3	1	HYDPMC9012	12" HYDRAULIC CYLINDER
4	1	MON701445	HYDRAULIC HOSE
5	1	MON701446	HYDRAULIC HOSE
6	1	SAC74174	PIVOT ROD
7	1	SAC75955	FLIP CHUTE ASSEMBLY
8	1	SAC75960	DISCHARGE ASSEMBLY
9	1	SPLPN71614	LYNCH PIN
10	1	STI511051	SPACER TUBE

MON900511 48" 3 AUGER DISCHARGE W/O FLIP CHUTE

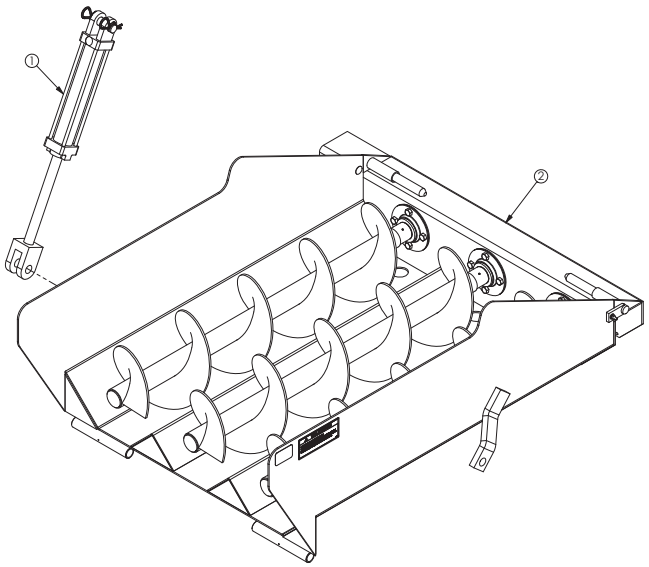

ITEM #	QTY	PART #	DESCRIPTION
1	1	HYDPMC9012	12" HYDRAULIC CYLINDER
2	1	SAC75960	DISCHARGE ASSEMBLY

SAC75960 48" 3 AUGER DISCHARGE SHELL

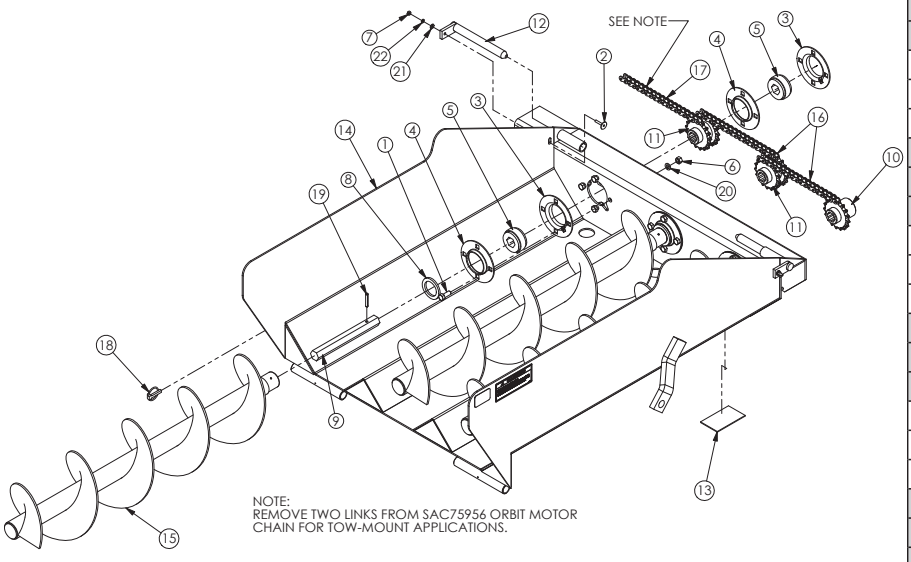

ITEM #	QTY	PART #	DESCRIPTION
1	24	BLT12X114NC	1/2X1-1/4 BOLT
2	2	BLT14X112EL	1/4X1-1/2 ELEVATOR BOLT
3	6	BRG80MM4GR45	GREASABLE BEARING FLANGE
4	6	BRG80MSC2	BEARING FLANGE
5	6	BRGHPS104TR	BEARING
6	24	NUT12NC	1/2" NUT
7	2	NUT14NC	1/4" NUT
8	3	SAC73055	BEARING SEAL
9	3	SAC73563	HEX SHAFT
10	1	SAC74152	SPROCKET
11	2	SAC74153	DOUBLE SPROCKET
12	2	SAC74170	HINGE PIN
13	3	SAC74172	DRAIN DOOR
14	1	SAC74180	DISCHARGE SHELL WELDMENT
15	3	SAC74183	AUGER WELDMENT
16	2	SAC75953	60 ROLLER CHAIN (50P)
17	1	SAC75956	60 ROLLER CHAIN (52P)
18	1	SPLPN71614	LYNCH PIN
19	3	SPRP516X2	5/16X2 ROLL PIN
20	24	WSH12LOCK	1/2" LOCK WASHER
21	2	WSH14FLAT	1/4" FLAT WASHER
22	2	WSH14LOCK	1/4" LOCK WASHER

DISCHARGE ASSEMBLIES

MON900512 SLIDE TRAY DISCHARGE W/O FLIP CHUTE

ITEM #	QTY	PART #	DESCRIPTION
1	1	HYDPMC8408	8" HYDRAULIC CYLINDER
2	1	SAC75961	DISCHARGE ASSEMBLY

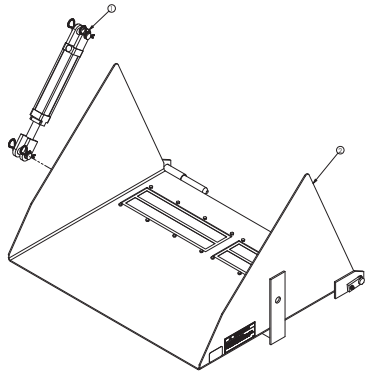

SAC75961 SLIDE TRAY DISCHARGE SHELL

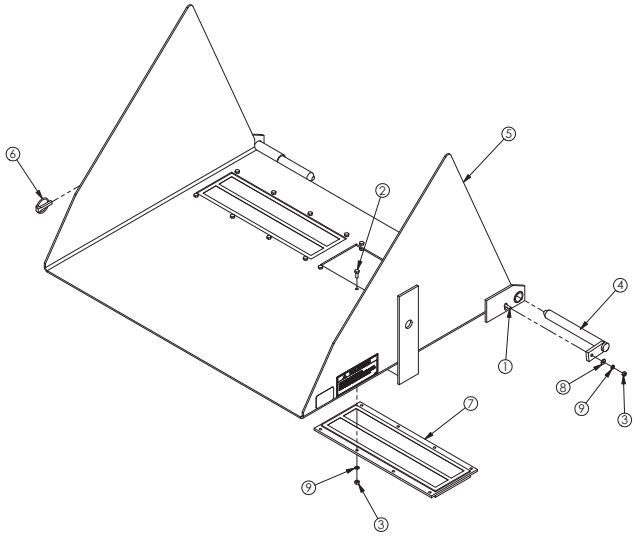

ITEM #	QTY	PART #	DESCRIPTION
1	2	BLT14X1ONC	1/4X1 TRUSS HEAD BOLT
2	16	BLT14X34NC	1/4X3/4 BOLT
3	18	NUT14NC	1/4" NUT
4	2	SAC74170	HINGE PIN
5	1	SAC74187	DISCHARGE SHELL WELDMENT
6	1	SPLPN71614	LYNCH PIN
7	2	SPMAGNET1850	MAGNET
8	2	WSH14FLAT	1/4" FLAT WASHER
9	18	WSH14LOCK	1/4" LOCK WASHER

SAC75955 FLIP CHUTE ASSEMBLY

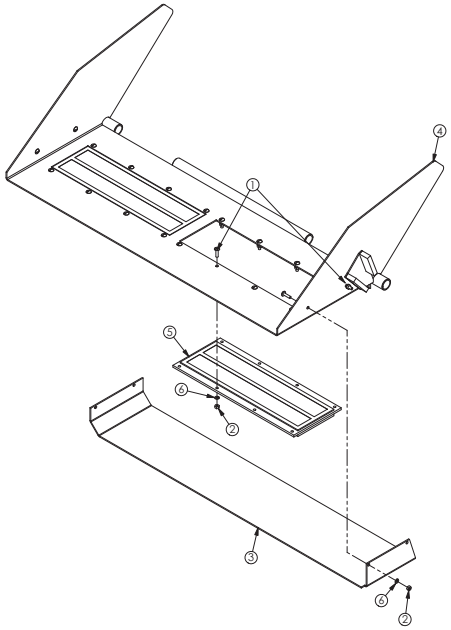

ITEM #	QTY	PART #	DESCRIPTION
1	20	BLT14X1ONC	1/4X1 TRUSS BOLT
2	20	NUT14NC	1/4" NUT
3	1	SAC73556	MAGNET GUARD
4	1	SAC74173	DISCHARGE CHUTE WELDMENT
5	2	SPMAGNET1850	MAGNET
6	20	WSH14LOCK	1/4" LOCK WASHER

DISCHARGE ASSEMBLIES

MON900837 39" 3 SLAT DISCHARGE W/ FLIP CHUTE

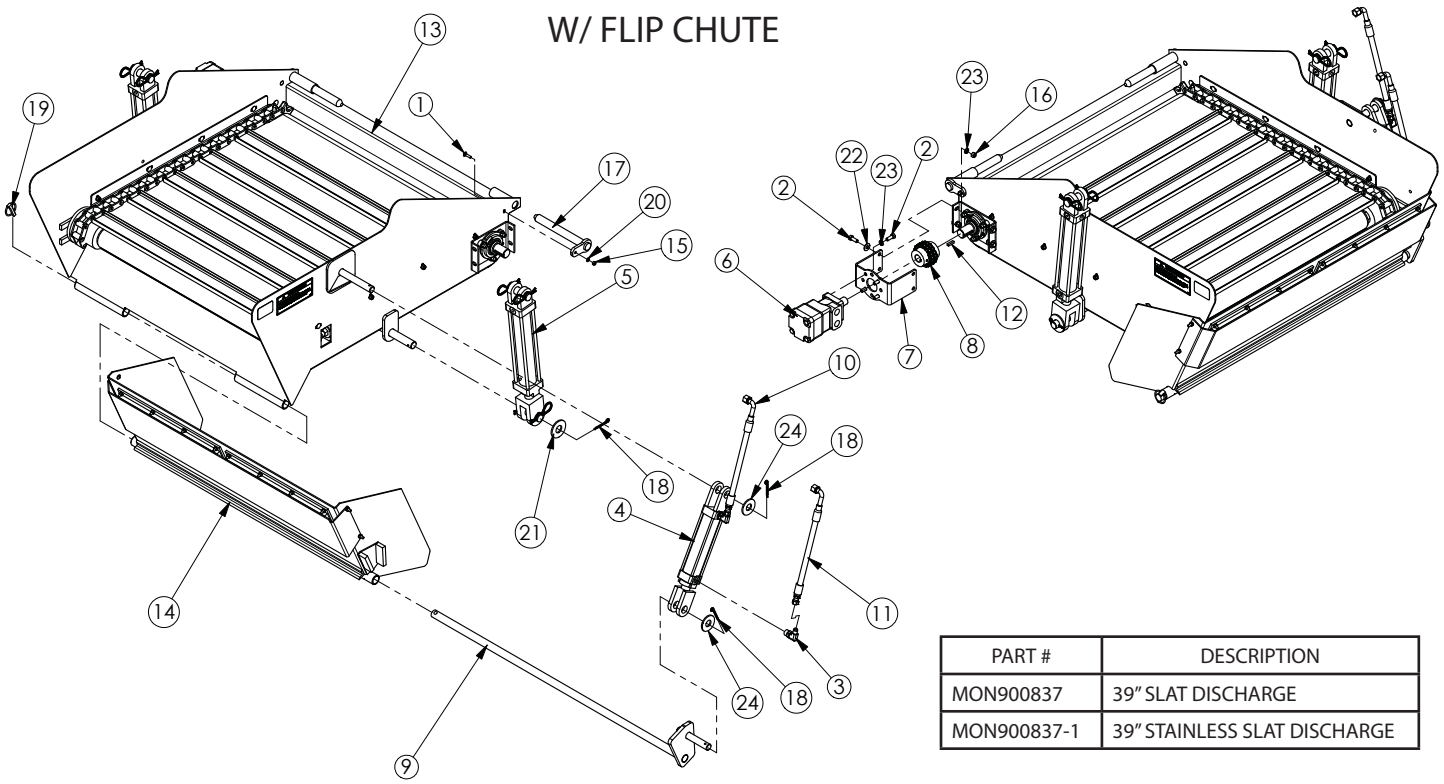

PART #	DESCRIPTION
MON900837	39" SLAT DISCHARGE
MON900837-1	39" STAINLESS SLAT DISCHARGE

ITEM #	MON900837 QTY	MON900837-1 QTY	PART #	DESCRIPTION
1	2	2	BLT14X1CNC	1/4X1 CARRIAGE BOLT
2	8	8	BLT38X1NC	3/8X1 BOLT
3	2	2	HYD6801-6-8	ELBOW ADAPTER
4	1	1	HYDPMC8406	6" CYLINDER
5	2	2	HYDPMC8410	10" CYLINDER
6	1	1	KN173568	ORBIT MOTOR
7	1	1	MON100925	DRIVE MOTOR BRACKET
8	1	1	MON700143	CHAIN COUPLER
9	1	1	MON701325	HINGE ROD
10	1	1	MON701445	HYDRAULIC HOSE
11	1	1	MON701446	HYDRAULIC HOSE
12	1	1	MON800026	1/4X1/4X1 KEY
13	1	0	MON900838	39" SLAT DISCHARGE ASSY
	0	1	MON900838-1	39" STAINLESS DISCHARGE ASSY
14	1	1	MON900839	MAGNETIC FLIP CHUTE
15	2	2	NUT14NC	1/4" NUT
16	4	4	NUT38NC	3/8" NUT
17	2	2	SAC74170	HINGE PIN
18	4	4	SPCP316X2	3/16X2 COTTER PIN
19	1	1	SPLPN71614	LYNCH PIN
20	2	2	WSH1FLAT	1" LOCK WASHER
21	2	2	WSH14LOCK	1/4" LOCK WASHER
22	4	4	WSH38FLAT	3/8" FLAT WASHER
23	8	8	WSH38LOCK	3/8" LOCK WASHER
24	2	2	WSH78FLAT	7/8" FLAT WASHER

DISCHARGE ASSEMBLIES

MON900847 39" SLAT DISCHARGE W/O FLIP CHUTE

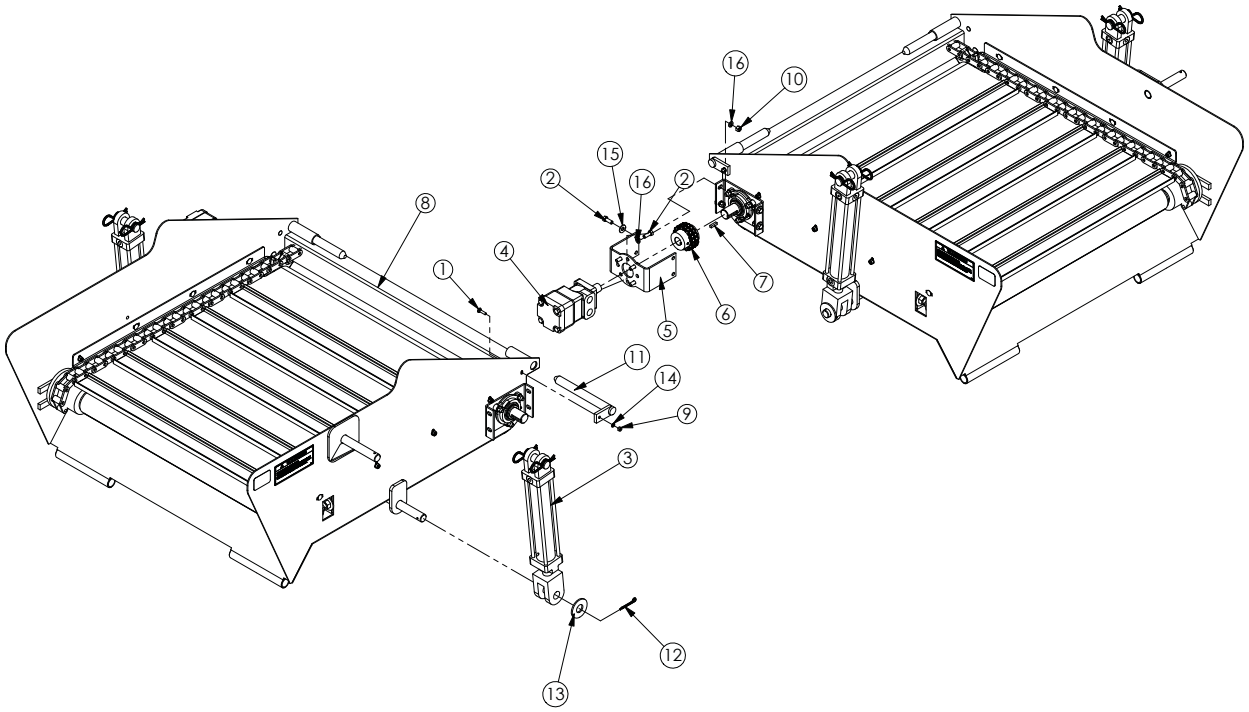

PART #	DESCRIPTION
MON900847	39" SLAT DISCHARGE NO FLIP
MON900847-1	39" STAINLESS SLAT DISCHARGE NO FLIP

ITEM #	MON900847 QTY	MON900847-1 QTY	PART #	DESCRIPTION
1	2	2	BLT14X1CNC	1/4X1 CARRIAGE BOLT
2	8	8	BLT38X1NC	3/8X1 BOLT
3	2	2	HYDPMC8410	10" CYLINDER
4	1	1	KN173568	ORBIT MOTOR
5	1	1	MON100925	DRIVE MOTOR BRACKET
6	1	1	MON700143	DRIVE COUPLER
7	1	1	MON800026	1/4X1/4X1 KEY
8	1	0	MON900838	39" SLAT DISCHARGE ASSY
	0	1	MON900838-1	39" STAINLESS DISCHARGE ASSY
9	2	2	NUT14NC	1/4" NUT
10	4	4	NUT38NC	3/8" NUT
11	2	2	SAC74170	HINGE PIN
12	2	2	SPCP316X2	3/16X2 COTTER PIN
13	2	2	WSH1FLAT	1" FLAT WASHER
14	2	2	WSH14LOCK	1/4" LOCK WASHER
15	4	4	WSH38FLAT	3/8" FLAT WASHER
16	8	8	WSH38LOCK	3/8" LOCK WASHER

DISCHARGE ASSEMBLIES

MON900838 39" 3 SLAT DISCHARGE BASE ASSEMBLY

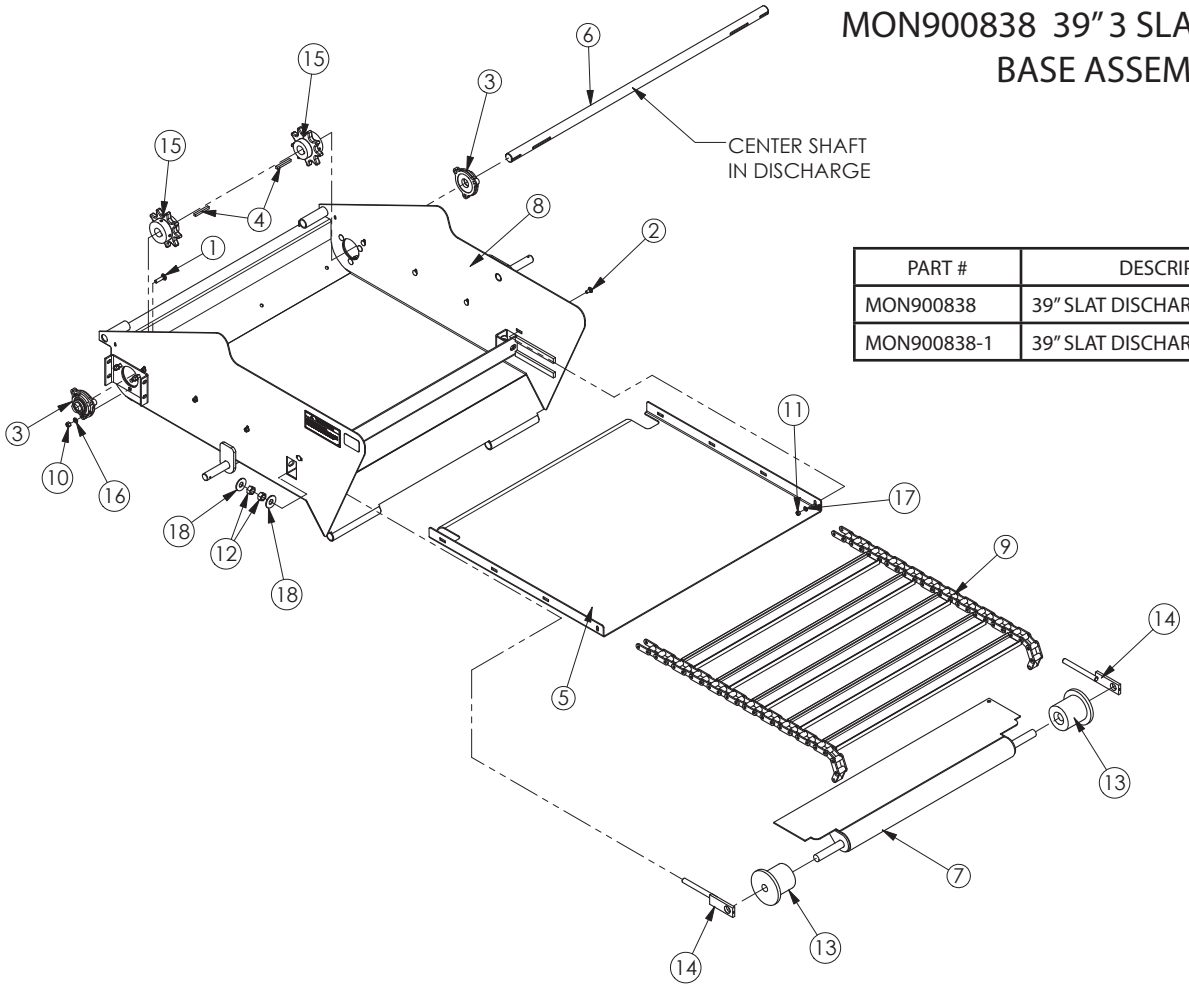

PART #	DESCRIPTION
MON900838	39" SLAT DISCHARGE
MON900838-1	39" SLAT DISCHARGE STAINLESS

ITEM #	MON900838 QTY	MON900838-1 QTY	PART #	DESCRIPTION
1	6	6	BLT38X112CNC	3/8X1-1/2 CARRIAGE BOLT
2	8	8	BLT516X34CNC	5/16X3/4 CARRIAGE BOLT
3	2	2	BRGFYG220N	3 BOLT FLANGE BEARING
4	2	2	MON100866	5/16X2-1/2 SQUARE KEY
5	1	0	MON103320	DISCHARGE PAN
	0	1	MON103320-1	STAINLESS DISCHARGE PAN
6	1	1	MON103335	DRIVE SHAFT
7	1	1	MON700511	FLOOR EXTENSION
8	1	0	MON701322	DISCHARGE SHELL
	0	1	MON701322-1	STAINLESS DISCHARGE SHELL
9	1	1	MON701323	DISCHARGE SLAT CHAIN
10	6	6	NUT38NC	3/8" NUT
11	8	8	NUT516NC	5/16" NUT
12	4	4	NUT58SS	5/8" STAINLESS NUT
13	2	2	SAC10106	IDLER ROLLER
14	2	2	SAC10123	CHAIN TIGHTENER
15	2	2	SAC10201	CHAIN DRIVE SPROCKET
16	6	6	WSH38LOCK	3/8" LOCK WASHER
17	8	8	WSH516LOCK	5/16" LOCK WASHER
18	4	4	WSH58FLAT	5/8" FLAT WASHER

DISCHARGE ASSEMBLIES

MON900845 48" 3 SLAT DISCHARGE W/ FLIP CHUTE

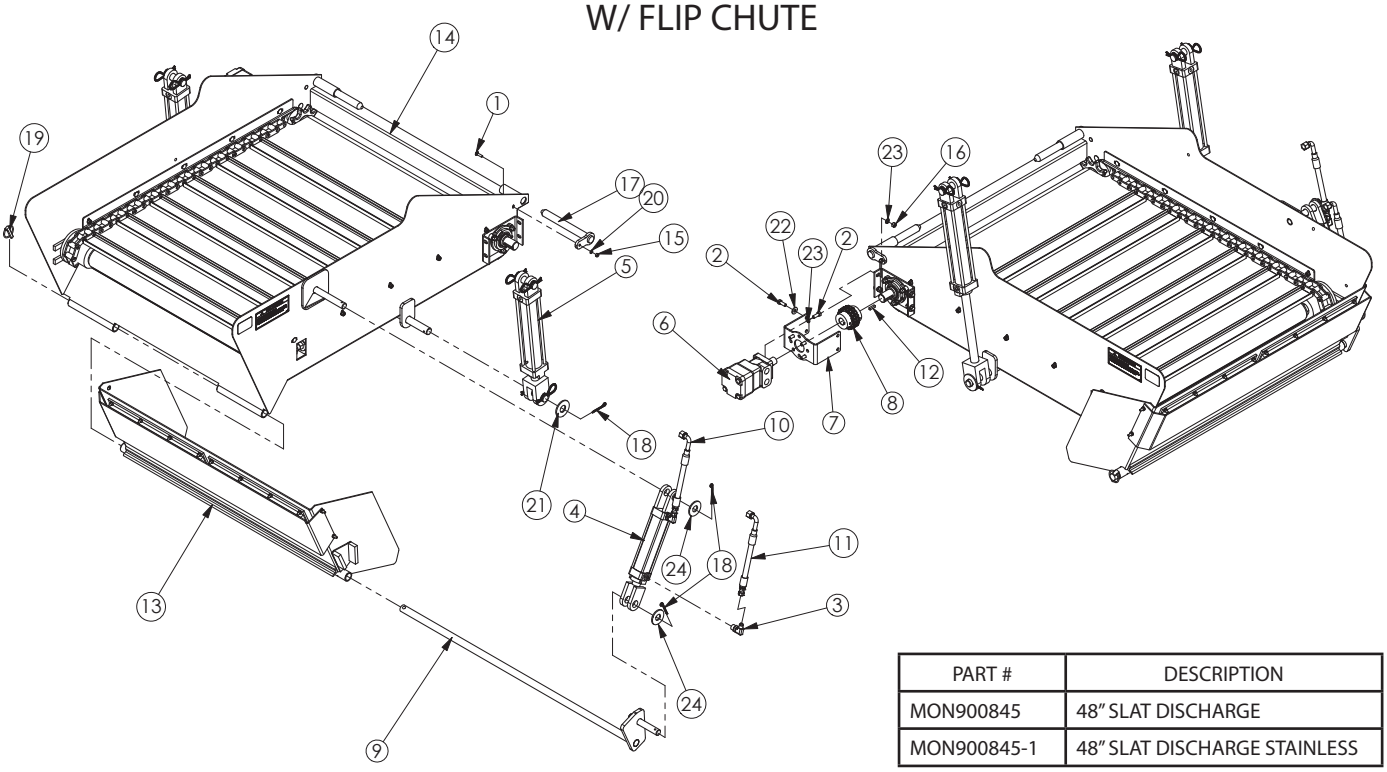

PART #	DESCRIPTION
MON900845	48" SLAT DISCHARGE
MON900845-1	48" SLAT DISCHARGE STAINLESS

ITEM #	MON900845 QTY	MON900845-1 QTY	PART #	DESCRIPTION
1	2	2	BLT14X1CNC	1/4X1 CARRIAGE BOLT
2	8	8	BLT38X1NC	3/8X1 BOLT
3	2	2	HYD6801-6-8	ELBOW ADAPTER
4	1	1	HYDPMC8406	6" CYLINDER
5	2	2	HYDPMC8410	10" CYLINDER
6	1	1	KN173568	ORBIT MOTOR
7	1	1	MON100925	DRIVE MOTOR BRACKET
8	1	1	MON700143	DRIVE COUPLER
9	1	1	MON701325	FLIP HINGE ROD
10	1	1	MON701550	HYDRAULIC HOSE
11	1	1	MON701551	HYDRAULIC HOSE
12	1	1	MON800026	1/4X1/4X1 KEY
13	1	1	MON900839	MAGNETIC FLIP CHUTE
14	1	0	MON900846	48" DISCHARGE ASSY
	0	1	MON900846-1	48" STAINLESS DISCHARGE ASSY
15	2	2	NUT14NC	1/4" NUT
16	4	4	NUT38NC	3/8" NUT
17	2	2	SAC74170	HINGE PIN
18	4	4	SPCP316X2	3/16X2 COTTER PIN
19	1	1	SPLPN71614	LYNCH PIN
20	2	2	WSH1FLAT	1" FLAT WASHER
21	2	2	WSH14LOCK	1/4" LOCK WASHER
22	4	4	WSH38FLAT	3/8" FLAT WASHER
23	8	8	WSH38LOCK	3/8" LOCK WASHER
24	2	2	WSH78FLAT	7/8" FLAT WASHER

DISCHARGE ASSEMBLIES

MON900848 48" SLAT DISCHARGE
W/O FLIP CHUTE

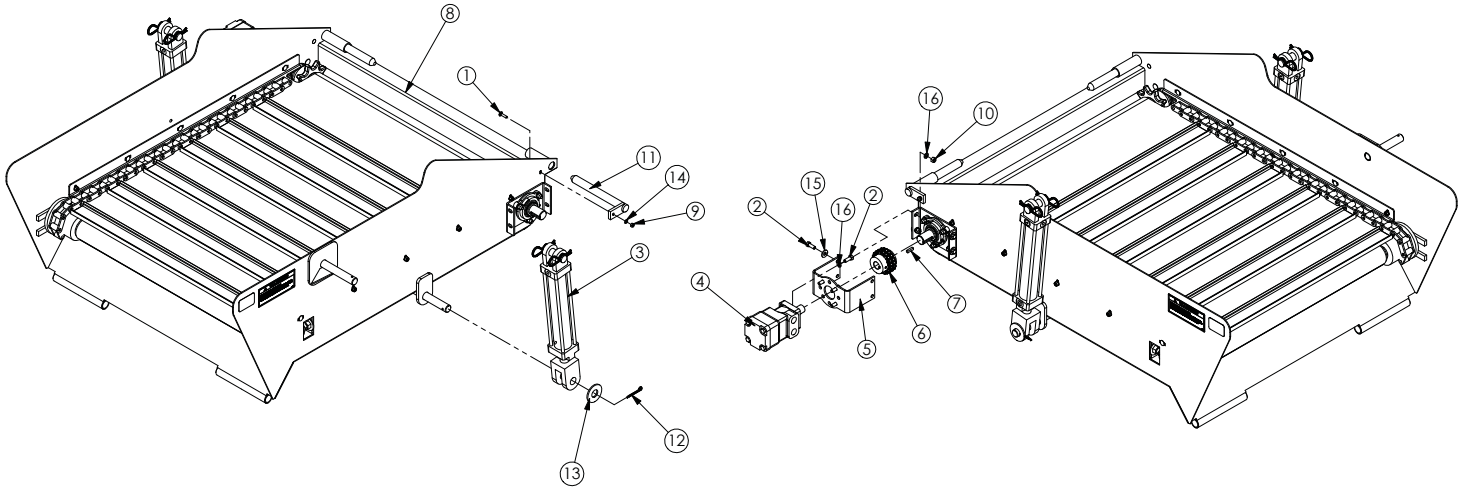

PART #	DESCRIPTION
MON900848	48" SLAT DISCHARGE NO FLIP
MON900848-1	48" STAINLESS SLAT DISCHARGE NO FLIP

ITEM #	MON900848 QTY	MON900848-1 QTY	PART #	DESCRIPTION
1	2	2	BLT14X1CNC	1/4X1 CARRIAGE BOLT
2	8	8	BLT38X1NC	3/8X1 BOLT
3	2	2	HYDPMC8410	10" CYLINDER
4	1	1	KN173568	ORBIT MOTOR
5	1	1	MON100925	DRIVE MOTOR BRACKET
6	1	1	MON700143	DRIVE COUPLER
7	1	1	MON800026	1/4X1/4X1 KEY
8	1	0	MON900846	48" SLAT DISCHARGE ASSY
	0	1	MON900846-1	48" STAINLESS DISCHARGE ASSY
9	2	2	NUT14NC	1/4" NUT
10	4	4	NUT38NC	3/8" NUT
11	2	2	SAC74170	HINGE PIN
12	2	2	SPCP316X2	3/16X2 COTTER PIN
13	2	2	WSH1FLAT	1" FLAT WASHER
14	2	2	WSH14LOCK	1/4" LOCK WASHER
15	4	4	WSH38FLAT	3/8" FLAT WASHER
16	8	8	WSH38LOCK	3/8" LOCK WASHER

DISCHARGE ASSEMBLIES

MON900846 48" SLAT DISCHARGE BASE ASSEMBLY

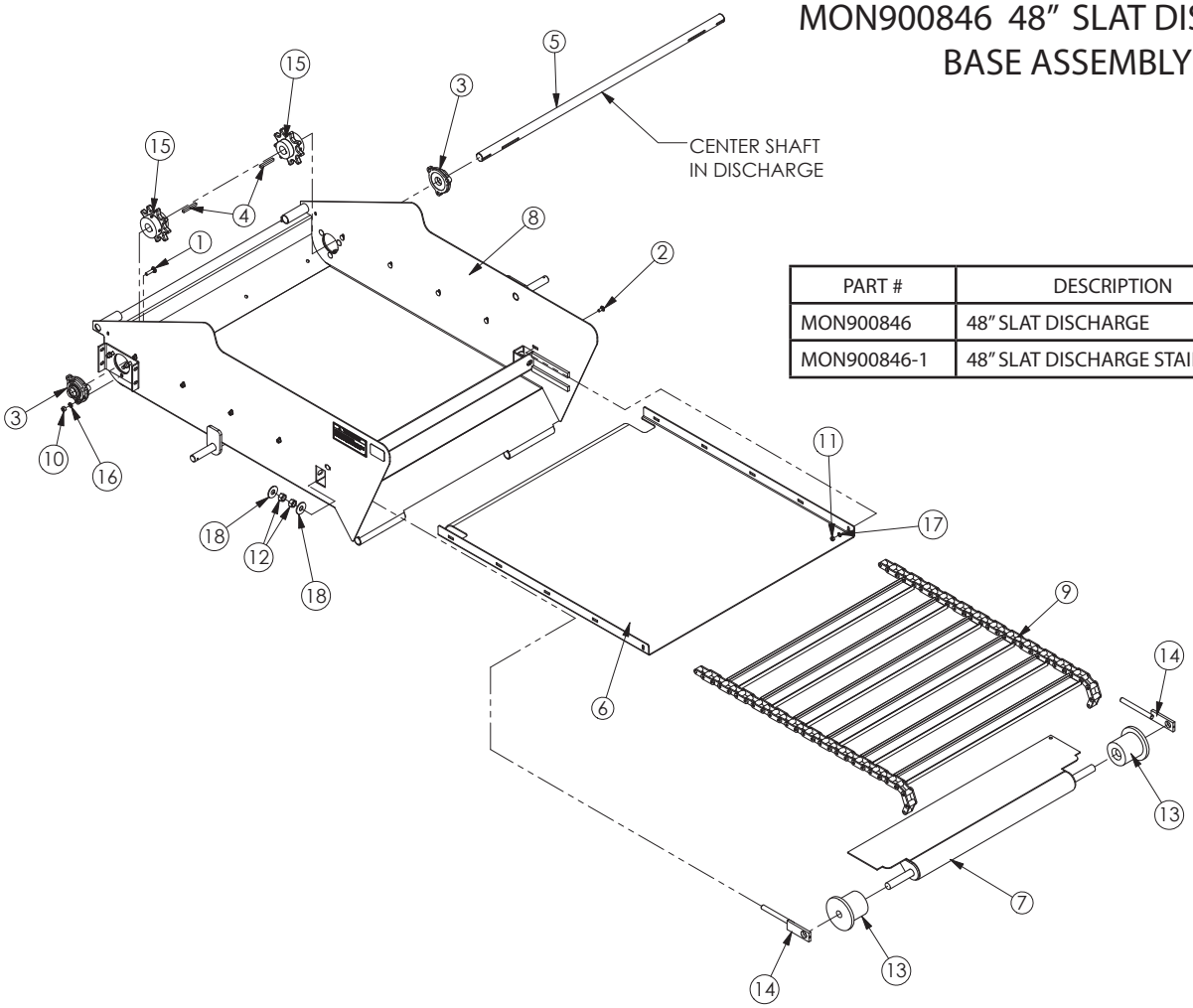

PART #	DESCRIPTION
MON900846	48" SLAT DISCHARGE
MON900846-1	48" SLAT DISCHARGE STAINLESS

ITEM #	MON900846 QTY	MON900846-1 QTY	PART #	DESCRIPTION
1	6	6	BLT38X112CNC	3/8X1-1/2 CARRIAGE BOLT
2	10	10	BLT516X34CNC	5/16X3/4 CARRIAGE BOLT
3	2	2	BRGFYG220N	3 BOLT FLANGE BEARING
4	2	2	MON100866	5/16X2-1/2 SQUARE KEY
5	1	0	MON103353	DISCHARGE PAN
	0	1	MON103353-1	STAINLESS DISCHARGE PAN
7	1	1	MON700511	FLOOR EXTENSION
8	1	0	MON701338	DISCHARGE SHELL
	0	1	MON701338-1	STAINLESS DISCHARGE SHELL
9	1	1	MON701339	DISCHARGE SLAT CHAIN
10	6	6	NUT38NC	3/8" NUT
11	10	10	NUT516NC	5/16" NUT
12	4	4	NUT58SS	5/8" STAINLESS NUT
13	2	2	SAC10106	IDLER ROLLER
14	2	2	SAC10123	CHAIN TIGHTENER
15	2	2	SAC10201	CHAIN DRIVE SPROCKET
16	6	6	WSH38LOCK	3/8" LOCK WASHER
17	10	10	WSH516LOCK	5/16" LOCK WASHER
18	4	4	WSH58FLAT	5/8" FLAT WASHER

DISCHARGE ASSEMBLIES

MON901004 & MON901044-1 34" SLAT DISCHARGES

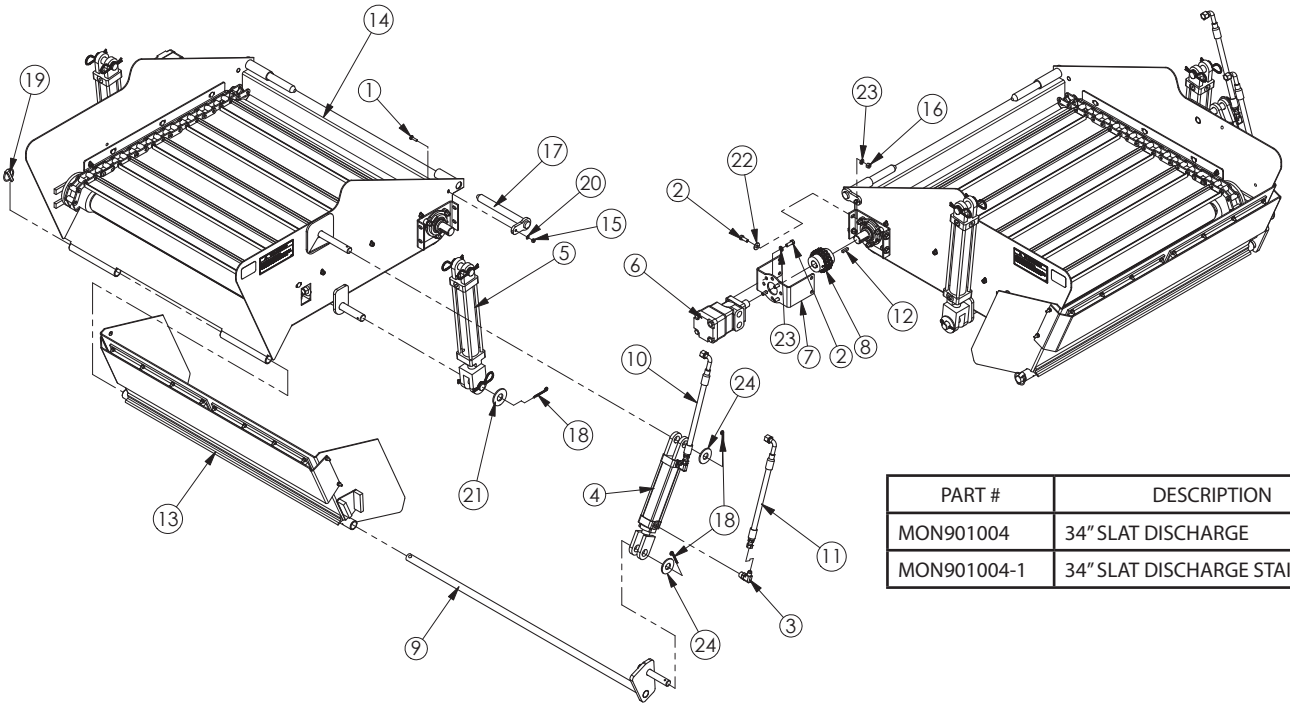

PART #	DESCRIPTION
MON901004	34" SLAT DISCHARGE
MON901004-1	34" SLAT DISCHARGE STAINLESS

ITEM #	MON901004 QTY	MON901004-1 QTY	PART #	DESCRIPTION
1	2	2	BLT14X1CNC	1/4X1 CARRIAGE BOLT
2	8	8	BLT38X1NC	3/8X1 BOLT
3	2	2	HYD6801-6-8	ELBOW ADAPTER
4	1	1	HYDPMC8406	6" CYLINDER
5	2	2	HYDPMC8410	10" CYLINDER
6	1	1	KN173568	ORBIT MOTOR
7	1	1	MON100925	DRIVE MOTOR BRACKET
8	1	1	MON700143	DRIVE COUPLER
9	1	1	MON701325	FLIP HINGE ROD
10	1	1	MON701445	HYDRAULIC HOSE
11	1	1	MON701446	HYDRAULIC HOSE
12	1	1	MON800026	1/4X1/4X1 KEY
13	1	1	MON900839	MAGNETIC FLIP CHUTE
14	1	0	MON901005	34" DISCHARGE ASSY
	0	1	MON901005-1	34" STAINLESS DISCHARGE ASSY
15	2	2	NUT14NC	1/4" NUT
16	4	4	NUT38NC	3/8" NUT
17	2	2	SAC74170	HINGE PIN
18	4	4	SPCP316X2	3/16X2 COTTER PIN
19	1	1	SPLPN71614	LYNCH PIN
20	2	2	WSH1FLAT	1" FLAT WASHER
21	2	2	WSH14LOCK	1/4" LOCK WASHER
22	4	4	WSH38FLAT	3/8" FLAT WASHER
23	8	8	WSH38LOCK	3/8" LOCK WASHER
24	2	2	WSH78FLAT	7/8" FLAT WASHER

DISCHARGE ASSEMBLIES

MON901005 34" SLAT DISCHARGE BASE ASSEMBLY

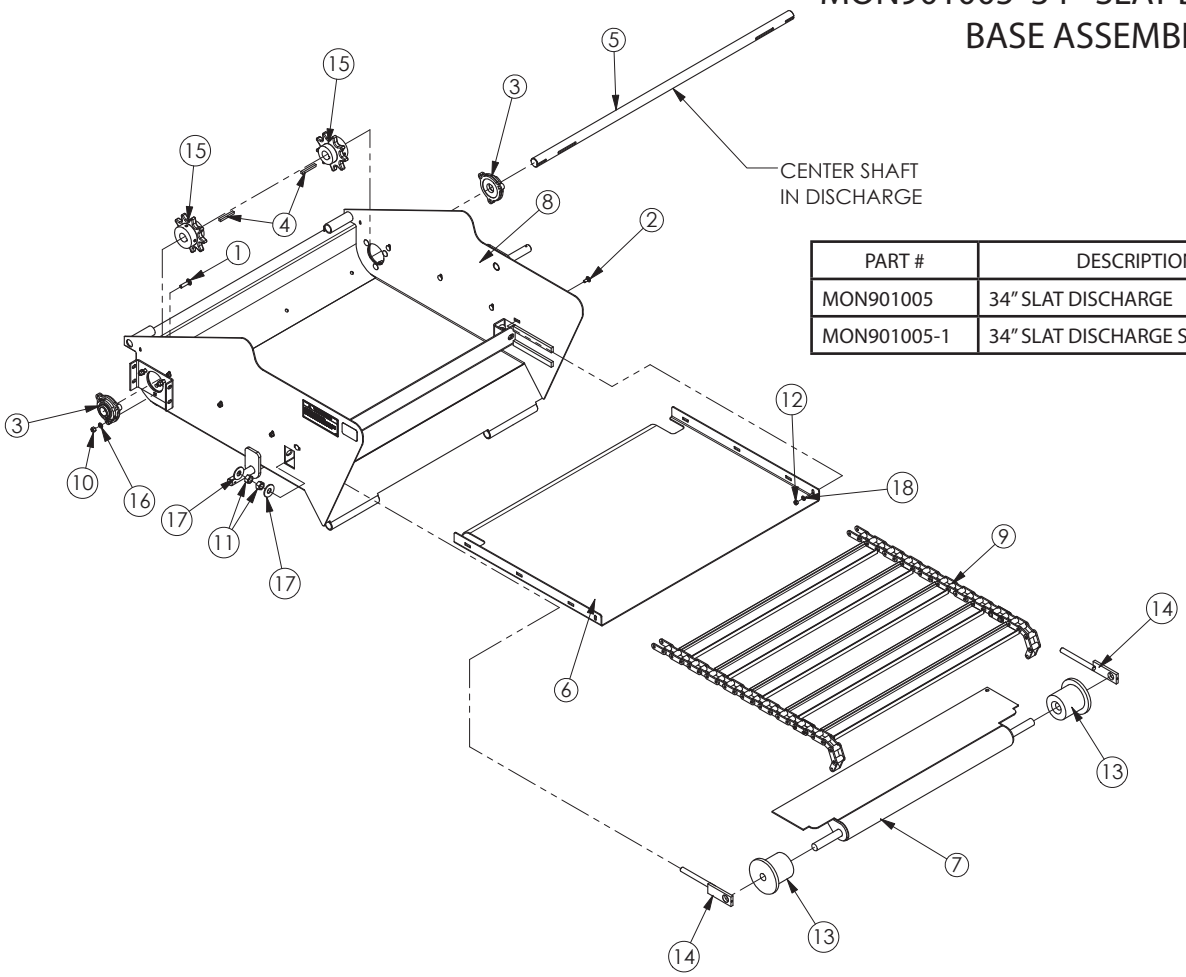

PART #	DESCRIPTION
MON901005	34" SLAT DISCHARGE
MON901005-1	34" SLAT DISCHARGE STAINLESS

ITEM #	MON901005 QTY	MON901005-1 QTY	PART #	DESCRIPTION
1	6	6	BLT38X112CNC	3/8X1-1/2 CARRIAGE BOLT
2	8	8	BLT516X34CNC	5/16X3/4 CARRIAGE BOLT
3	2	2	BRGFYG220N	3 BOLT FLANGE BEARING
4	2	2	MON100866	5/16X2-1/2 SQUARE KEY
5	1	1	MON103335	DRIVE SHAFT
6	1	0	MON104200	DISCHARGE PAN
	0	1	MON104200-1	STAINLESS DISCHARGE PAN
7	1	1	MON700511	FLOOR EXTENSION
8	1	0	MON701601	DISCHARGE SHELL
	0	1	MON701601-1	STAINLESS DISCHARGE SHELL
9	1	1	MON701602	DISCHARGE SLAT CHAIN
10	6	6	NUT38NC	3/8" NUT
11	4	4	NUT58SS	5/8" STAINLESS NUT
12	8	8	NUT516NC	5/16" NUT
13	2	2	SAC10106	IDLER ROLLER
14	2	2	SAC10123	CHAIN TIGHTENER
15	2	2	SAC10201	CHAIN DRIVE SPROCKET
16	6	6	WSH38LOCK	3/8" LOCK WASHER
17	4	4	WSH58FLAT	5/8" FLAT WASHER
18	8	8	WSH516LOCK	5/16" LOCK WASHER

DISCHARGE HYDRAULIC ASSEMBLIES

MON900858-1 SLAT DISCHARGE (NO FLIP) & MON900858-2 (W/ FLIP)

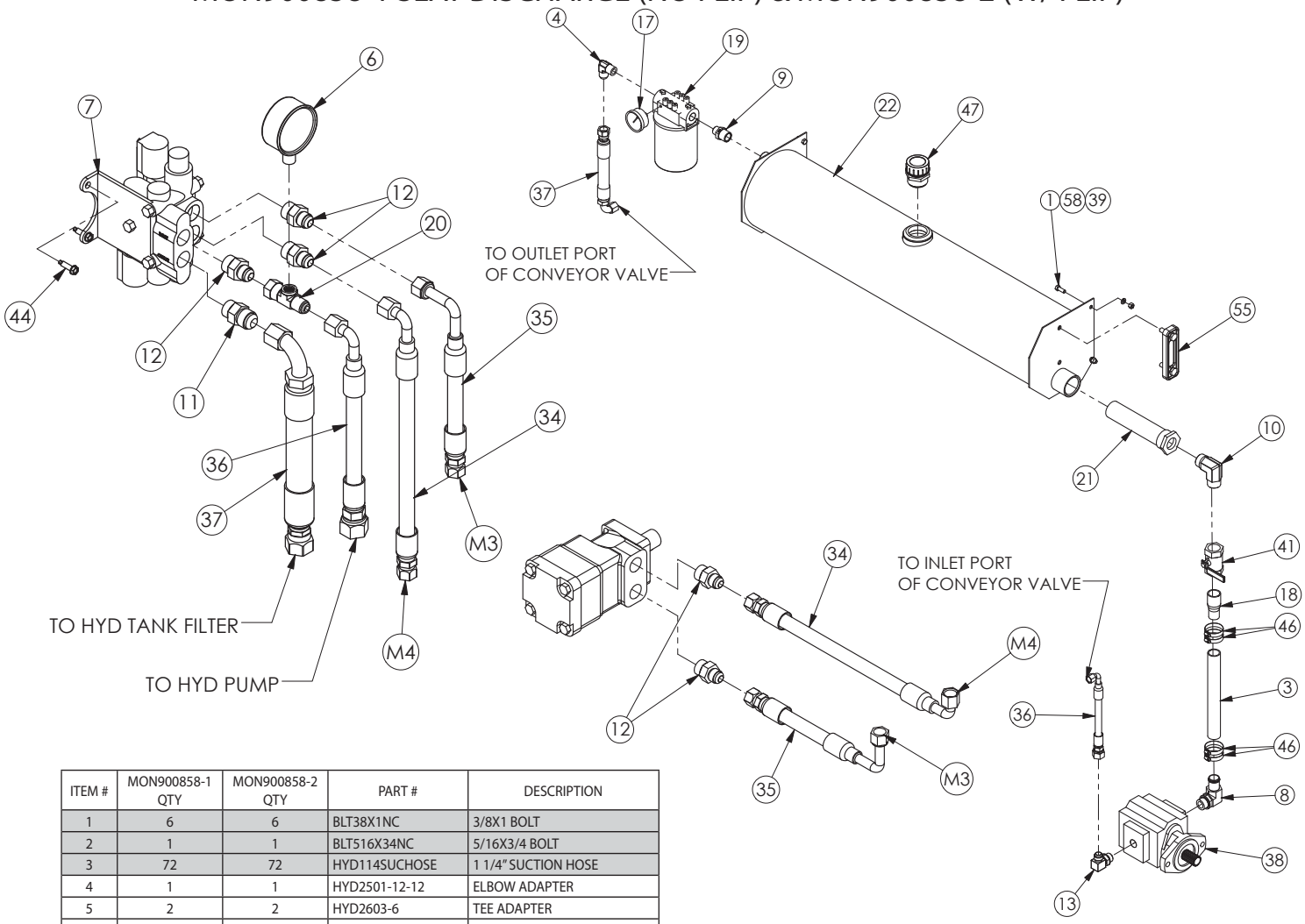

ITEM #	MON900858-1 QTY	MON900858-2 QTY	PART #	DESCRIPTION
1	6	6	BLT38X1NC	3/8X1 BOLT
2	1	1	BLT516X34NC	5/16X3/4 BOLT
3	72	72	HYD114SUCHOSE	1 1/4" SUCTION HOSE
4	1	1	HYD2501-12-12	ELBOW ADAPTER
5	2	2	HYD2603-6	TEE ADAPTER
6	1	1	HYD3000FL	PRESSURE GAUGE
7	1	1	HYD38A1	SPOOL VALVE
8	1	1	HYD4601-20-16	ADAPTER
9	1	1	HYD5404-16-12	ADAPTER
10	1	1	HYD5500-20-20	ELBOW FITTING
11	1	1	HYD6400-10-10	ADAPTER
12	5	5	HYD6400-8-10	ADAPTER
13	1	1	HYD6801-12-12	ELBOW ADAPTER
14	2	3	HYD6801-4-4	ELBOW ADAPTER
15	6	6	HYD6801-6-8	ELBOW ADAPTER
16	2	3	HYD6801LL-4-4	ELBOW ADAPTER
17	1	1	HYDC120	PRESSURE GAUGE
18	1	1	HYDE804	ADAPTER
19	1	1	HYDF11BA	FILTER ASSEMBLY
20	1	1	HYDGP6504-8-4P	GAUGE ADAPTER
21	1	1	HYDS25100RV3	STRAINER
22	1	1	MON700990	HYDRAULIC TANK
23	0	1	MON701165	HYDRAULIC HOSE
24	0	1	MON701166	HYDRAULIC HOSE
25	2	2	MON701168	HYDRAULIC HOSE
26	1	0	MON701335	HYDRAULIC HOSE
27	0	1	MON701336	HYDRAULIC HOSE
28	2	2	MON701348	HYDRAULIC HOSE
29	2	2	MON701349	HYDRAULIC HOSE
30	1	1	MON701350	HYDRAULIC HOSE
31	1	1	MON701351	HYDRAULIC HOSE
32	0	-1	MON701445	HYDRAULIC HOSE
33	0	-1	MON701446	HYDRAULIC HOSE
34	1	1	MON701623-1	HYDRAULIC HOSE
35	1	1	MON701624-1	HYDRAULIC HOSE
36	1	1	MON701664	HYDRAULIC HOSE

ITEM #	MON900858-1 QTY	MON900858-2 QTY	PART #	DESCRIPTION
37	1	1	MON701665	HYDRAULIC HOSE
38	1	1	MON800598	HYDRAULIC PUMP
39	4	4	NUT38NC	3/8" NUT
40	20	20	OILDEXTRON	OIL
41	1	1	PFBR114BVALVE	1 1/4" BALL VALVE
42	1	1	SAC73825	POWER UNIT COVER
43	1	1	SAC74188	POWER UNIT MOUNT
44	10	10	SP14X1TS	1/4X1 SELF TAPPING SCREW
45	1	1	SPCABLETIEHVY30	CABLE TIE
46	4	4	SPHC125	HOSE CLAMP
47	1	1	STI591765	BREATHER CAP
48	1	1	STI680307	2GA CABLE ASSEMBLY
49	2	2	STI700201	LOOM CLAMP
50	144	144	STI700221	HYDRAULIC OIL
51	192	192	STI700418	1GA BLACK BATTERY CABLE
52	6	6	STI700423	1G BATTEY CABLE LUG
53	1	1	STI701246	300 AMP FUSE
54	1	1	STI701247	FUSE HOLDER
55	1	1	STI702230	SIGHT GUAGE
56	192	192	STI704493	1GA RED BATTERY CABLE
57	2	2	WSH38FLAT	3/8" FLAT WASHER
58	6	6	WSH38LOCK	3/8" LOCK WASHER
59	1	1	WSH516FLAT	5/16" FLAT WASHER
60	1	1	WSH516LOCK	5/16" LOCK WASHER

DISCHARGE HYDRAULIC ASSEMBLIES

MON900858-1 SLAT DISCHARGE (NO FLIP) & MON900858-2 (W/ FLIP)

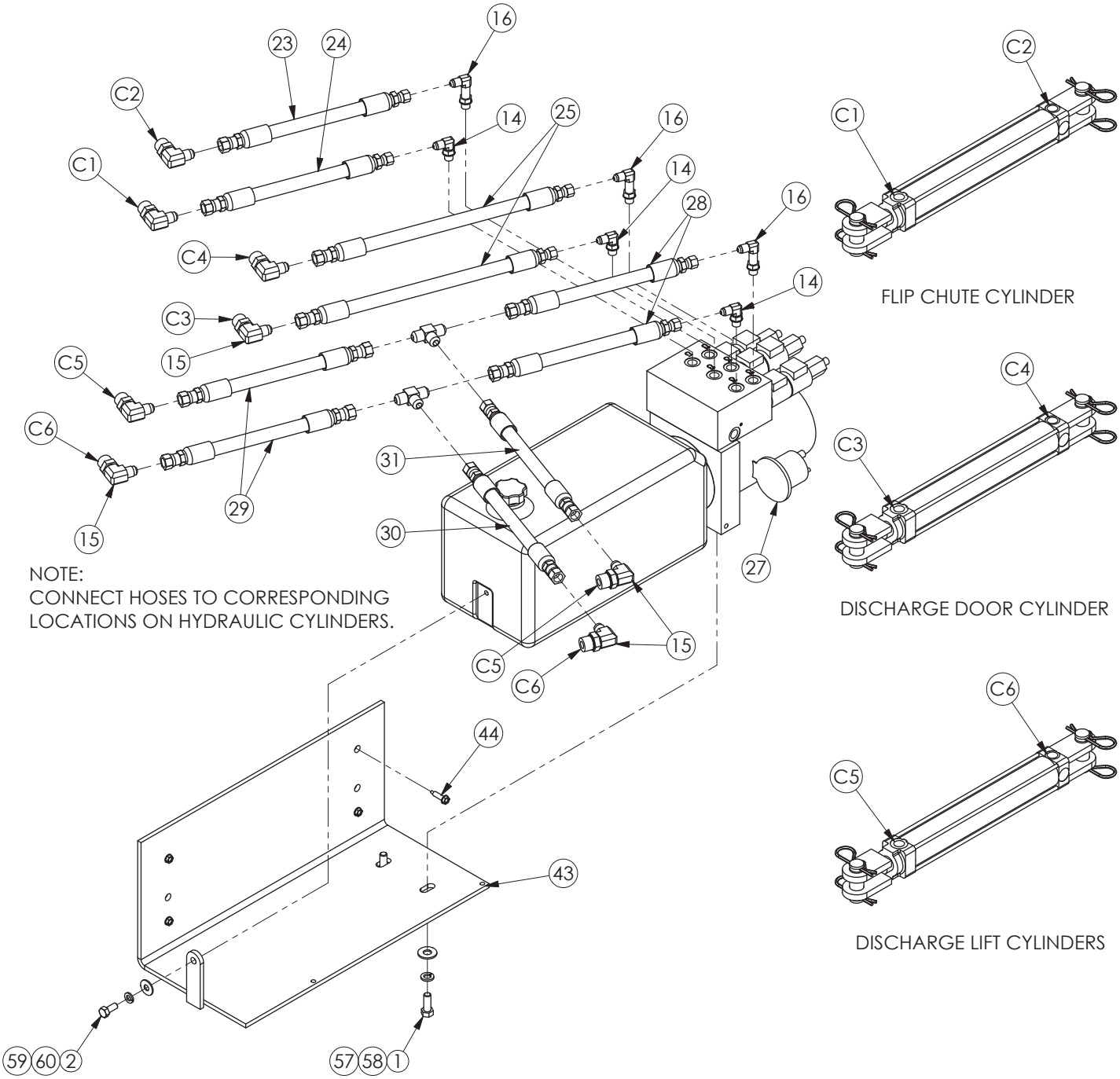

NOTE:
CONNECT HOSES TO CORRESPONDING LOCATIONS ON HYDRAULIC CYLINDERS.

FLIP CHUTE CYLINDER

DISCHARGE DOOR CYLINDER

DISCHARGE LIFT CYLINDERS

DISCHARGE HYDRAULIC ASSEMBLIES

MON900501 POWER DISCHARGE ASSEMBLY WITH FLIP CHUTE

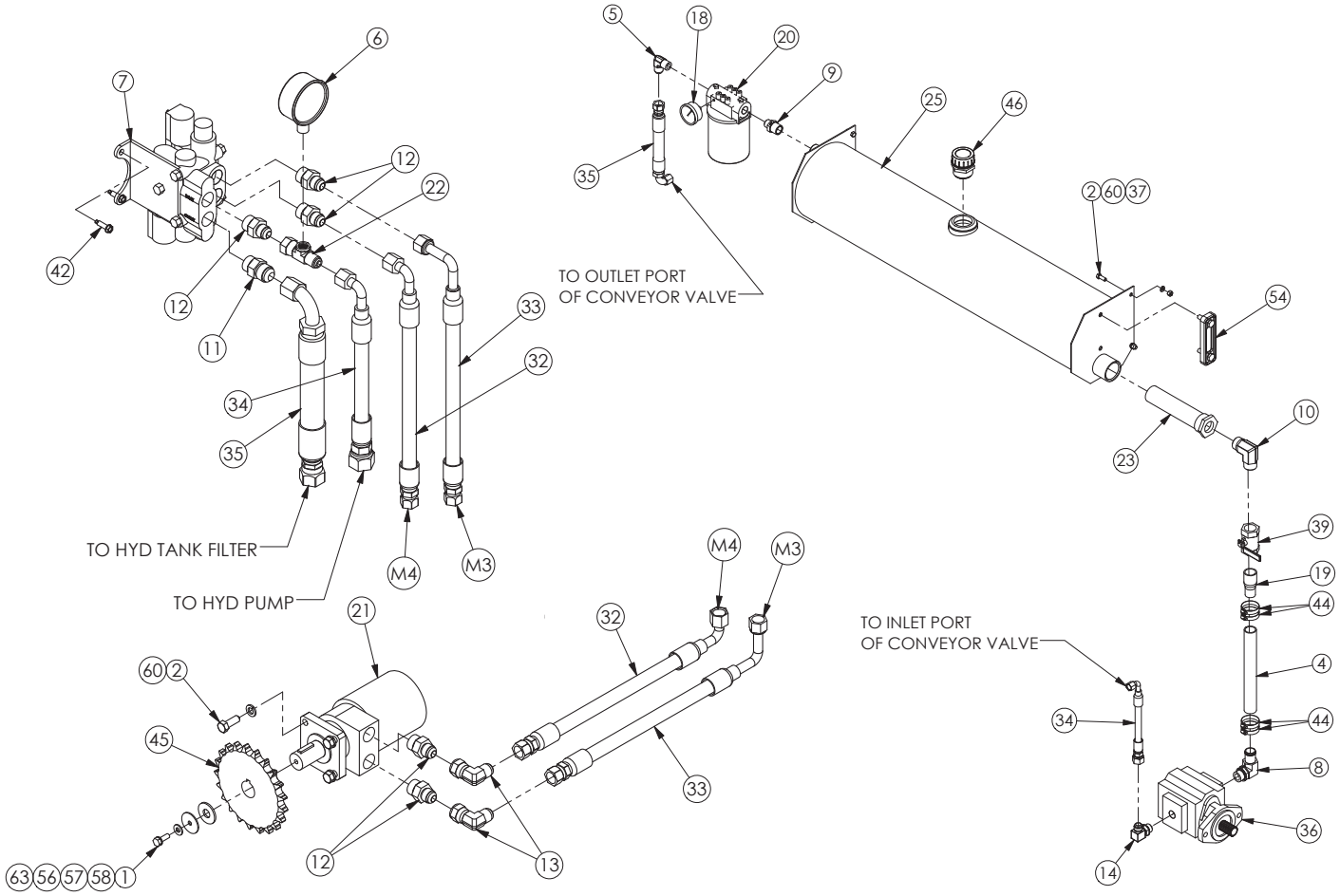

ITEM #	QTY	PART #	DESCRIPTION
1	1	BLT14X34NC	1/4X3/4 BOLT
2	10	BLT38X1NC	3/8X1 BOLT
3	1	BLT516X34NC	5/16X3/4 BOLT
4	72	HYD114SUCHOSE	1 1/4" SUCTION HOSE
5	1	HYD2501-12-12	ELBOW ADAPTER
6	1	HYD3000FL	PRESSURE GAUGE
7	1	HYD38A1	SPOOL VALVE
8	1	HYD4601-20-16	UNION ADAPTER
9	1	HYD5404-16-12	PIPE NIPPLE
10	1	HYD5500-20-20	ELBOW ADAPTER
11	1	HYD6400-10-10	UNION ADAPTER
12	5	HYD6400-8-10	UNION ADAPTER
13	2	HYD6500-8-8	ELBOW ADAPTER
14	1	HYD6801-12-12	ELBOW ADAPTER
15	3	HYD6801-4-4	ELBOW ADAPTER
16	4	HYD6801-6-8	ELBOW ADAPTER
17	3	HYD6801LL-4-4	ELBOW ADAPTER
18	1	HYDC120	PRESSURE GAUGE
19	1	HYDE804	ADAPTER
20	1	HYDF11BA	FILTER ASSEMBLY
21	1	HYDFH0244FS100A	HYDRAULIC MOTOR
22	1	HYDGP6504-8-4P	GAUGE ADAPTER
23	1	HYDS25100RV3	STRAINER
24	-1	MON700944	HYDRAULIC HOSE
25	1	MON700990	HYDRAULIC TANK
26	-1	MON700994	HYDRAULIC HOSE
27	1	MON701165	HYDRAULIC HOSE
28	1	MON701166	HYDRAULIC HOSE
29	2	MON701167	HYDRAULIC HOSE
30	2	MON701168	HYDRAULIC HOSE
31	1	MON701336	POWER UNIT
32	1	MON701623-2	HYDRAULIC HOSE
33	1	MON701624-2	HYDRAULIC HOSE

ITEM #	QTY	PART #	DESCRIPTION
34	1	MON701664	HYDRAULIC HOSE
35	1	MON701665	HYDRAULIC HOSE
36	1	MON800598	HYDRAULIC PUMP
37	4	NUT38NC	3/8" NUT
38	20	OILDEXTRON	OIL
39	1	PFBR114BVALVE	1 1/4" BALL VALVE
40	1	SAC73825	POWER UNIT COVER
41	1	SAC74188	POWER UNIT MOUNT
42	10	SP14X1TS	1/4X1 SELF TAPPING SCREW
43	1	SPCABLETIEHVY30	CABLE TIE
44	4	SPHC125	HOSE CLAMP
45	1	SPK60B21X1	SPROCKET
46	1	STI591765	BREATHER CAP
47	1	STI680307	2GA CABLE ASSEMBLY
48	2	STI700201	LOOM CLAMP
49	144	STI700221	HYDRAULIC OIL
50	192	STI700418	1GA BLACK BATTERY CABLE
51	6	STI700423	1G BATTEY CABLE LUG
52	1	STI701246	300 AMP FUSE
53	1	STI701247	FUSE HOLDER
54	1	STI702230	SIGHT GAUGE
55	192	STI704493	1GA RED BATTERY CABLE
56	1	WSH14FENSS	1/4" FENDER WASHER
57	1	WSH14FLAT	1/4" FLAT WASHER
58	1	WSH14LOCK	1/4" LOCK WASHER
59	2	WSH38FLAT	3/8" FLAT WASHER
60	10	WSH38LOCK	3/8" LOCK WASHER
61	1	WSH516FLAT	5/16" FLAT WASHER
62	1	WSH516LOCK	5/16" LOCK WASHER
63	1	WSH716FLAT	7/16" FLAT WASHER

DISCHARGE HYDRAULIC ASSEMBLIES

MON900501 POWER DISCHARGE ASSEMBLY WITH FLIP CHUTE

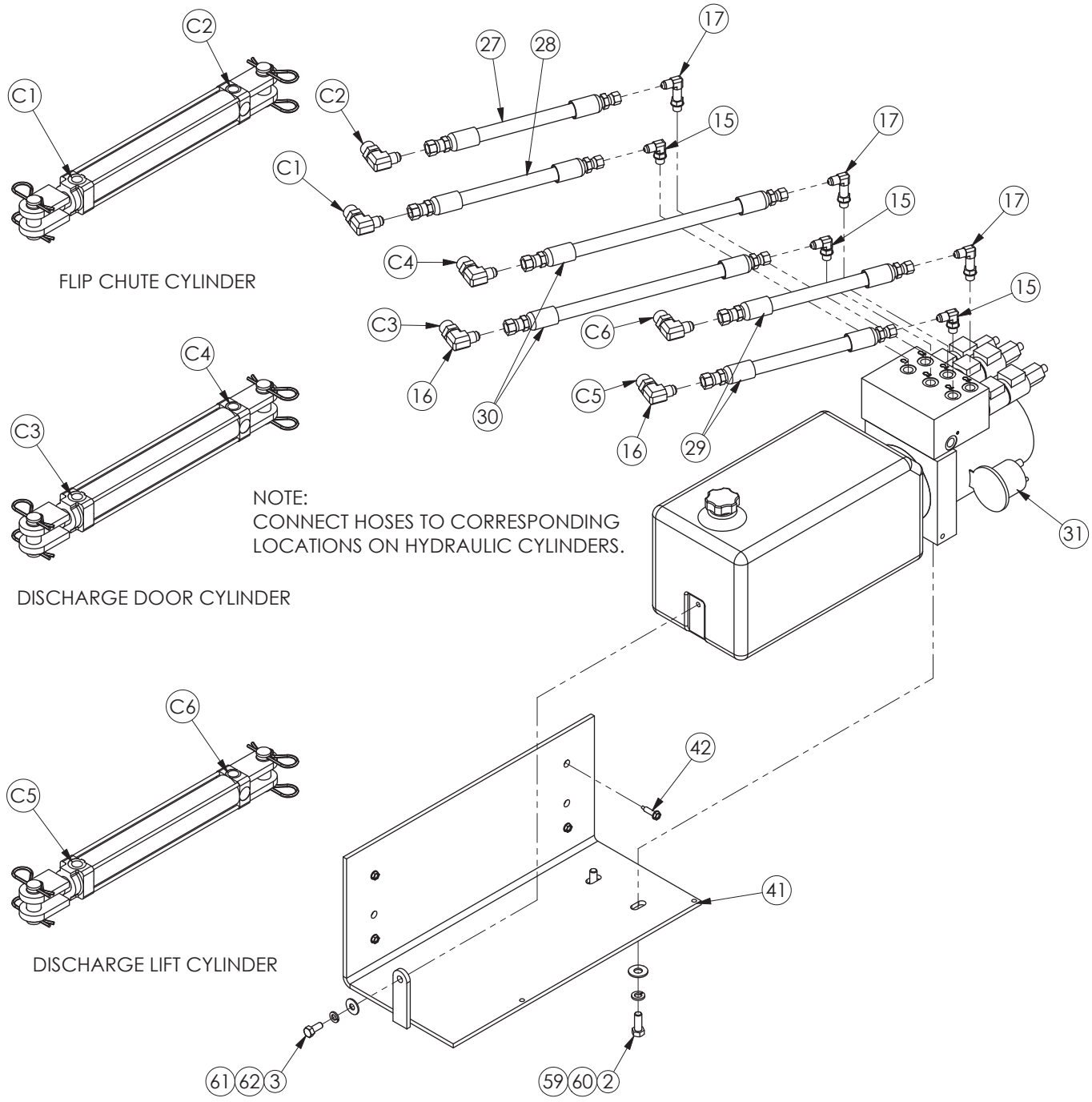

DISCHARGE HYDRAULIC ASSEMBLIES

MON901011-1 HYDRO TRUCK SLAT DISCHARGE

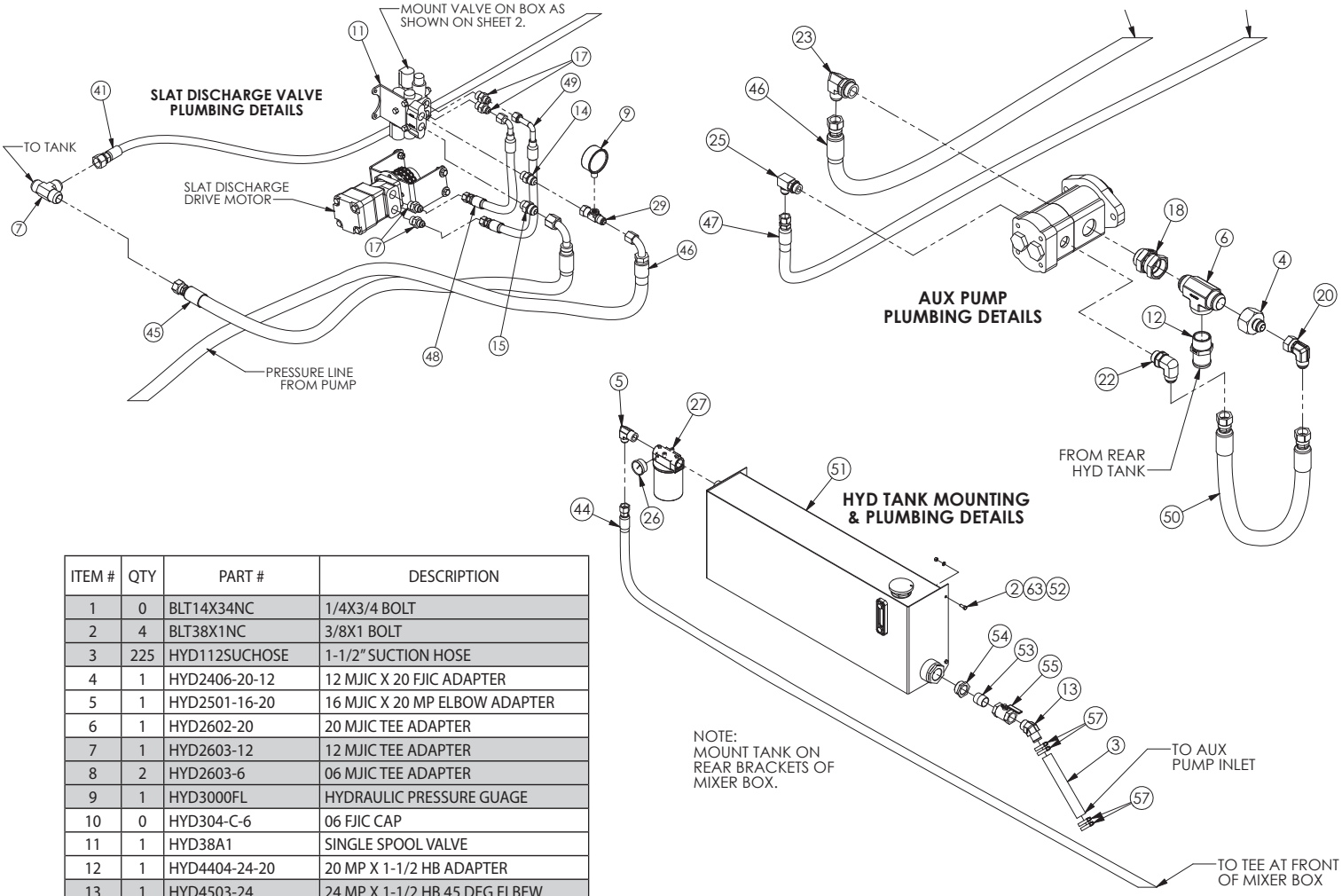

ITEM #	QTY	PART #	DESCRIPTION
1	0	BLT14X34NC	1/4X3/4 BOLT
2	4	BLT38X1NC	3/8X1 BOLT
3	225	HYD112SUCHOSE	1-1/2" SUCTION HOSE
4	1	HYD2406-20-12	12 MJIC X 20 FJIC ADAPTER
5	1	HYD2501-16-20	16 MJIC X 20 MP ELBOW ADAPTER
6	1	HYD2602-20	20 MJIC TEE ADAPTER
7	1	HYD2603-12	12 MJIC TEE ADAPTER
8	2	HYD2603-6	06 MJIC TEE ADAPTER
9	1	HYD3000FL	HYDRAULIC PRESSURE GUAGE
10	0	HYD304-C-6	06 FJIC CAP
11	1	HYD38A1	SINGLE SPOOL VALVE
12	1	HYD4404-24-20	20 MP X 1-1/2 HB ADAPTER
13	1	HYD4503-24	24 MP X 1-1/2 HB 45 DEG ELBEW
14	1	HYD6400-10-10	10 MJIC X 10 MORG ADAPTER
15	1	HYD6400-12-10	12 MJIC X 10 MORG ADAPTER
16	7	HYD6400-6-8	06 MJIC X 08 MORG ADPATER
17	6	HYD6400-8-10	08 MJIC X 10 MORG ADPATER
18	1	HYD6402-20-20	20 MORG X 20 FJIC ADAPTER
19	2	HYD6408-10	10 MORG PLUG
20	0	HYD6500-12-12	12 MJIC X 12 FJIC ELBOW ADAPTER
21	0	HYD6500-8-8	08 MJIC X 08 FJIC ELBOW ADAPTER
22	1	HYD6801-12-12	12 MJIC X 12 MORG ELBOT ADAPTER
23	1	HYD6801-12-16	12 MJIC X 16 MORG ELBOW ADAPTER
24	5	HYD6801-6-8	06 MJIC X 08 MORG ELBOW ADAPTER
25	1	HYD6801-8-10	08 MJIC X 10 MORG ELBOW ADAPTER
26	1	HYDC120	2-1/2" PRESSURE GAUGE
27	1	HYDFAFSF510210	FILTER ASSEMBLY
28	0	HYDFH0244FS100A	ORBIT MOTOR
29	1	HYSGP6504-10-4P	10 MJIC X 04 FP GAUGE ADAPTER
30	1	MON700368	VALVE COVER
31	0	MON700944	HYDRAULIC HOSE
32	0	MON700994	HYDRAULIC HOSE
33	-1	MON701445	HYDRAULIC HOSE
34	-1	MON701446	HYDRAULIC HOSE
35	1	MON701583-1	HYDRAULIC HOSE
36	1	MON701584-1	HYDRAULIC HOSE
37	3	MON701585-1	HYDRAULIC HOSE
38	1	MON701588-1	HYDRAULIC HOSE
39	1	MON701589-1	HYDRAULIC HOSE
40	1	MON701590-1	HYDRAULIC TANK
41	1	MON701598	HYDRAULIC HOSE
42	2	MON701599-1	HYDRAULIC HOSE

ITEM #	QTY	PART #	DESCRIPTION
43	1	MON701616	3 BANK HYDRAULIC VALVE
44	1	MON701619	HYDRAULIC HOSE
45	1	MON701620	HYDRAULIC HOSE
46	1	MON701621	HYDRAULIC HOSE
47	1	MON701622	HYDRAULIC HOSE
48	1	MON701623-1	HYDRAULIC HOSE
49	1	MON701624-1	HYDRAULIC HOSE
50	1	MON701625	HYDRAULIC HOSE
51	1	MON900397	30 GAL HYDRAULIC TANK
52	4	NUT38NC	3/8" NUT
53	1	PFBL112CLNIP	1-1/2" CLOSE PIPE NIPPLE
54	1	PFBL2X112BUS	1X1-1/2 BUSHING
55	1	FPBR112BVALVE	1-1/2" BALL VALVE
56	18	SP14X1TS	1/4X1 SELF TAPPING SCREW
57	4	SPHC150	HOSE CLAMP
58	0	SPK60B21X1	SPROCKET
59	280	STI700221	HYDRAULIC OIL
60	0	WSH14FENSS	1/4" FENDER WASHER
61	0	WSH14FLAT	1/4" FLAT WASHER
62	0	WSH14LOCK	1/4" LOCK WASHER
63	4	WSH38LOCK	3/8" LOCK WASHER
64	0	WSH716FLAT	7/16" FLAT WASHER
65	1	MON800637	RELIEF VALVE
66	6	STI700201	LOOM CLAMP

DISCHARGE HYDRAULIC ASSEMBLIES

MON901011-1 HYDRO TRUCK SLAT DISCHARGE

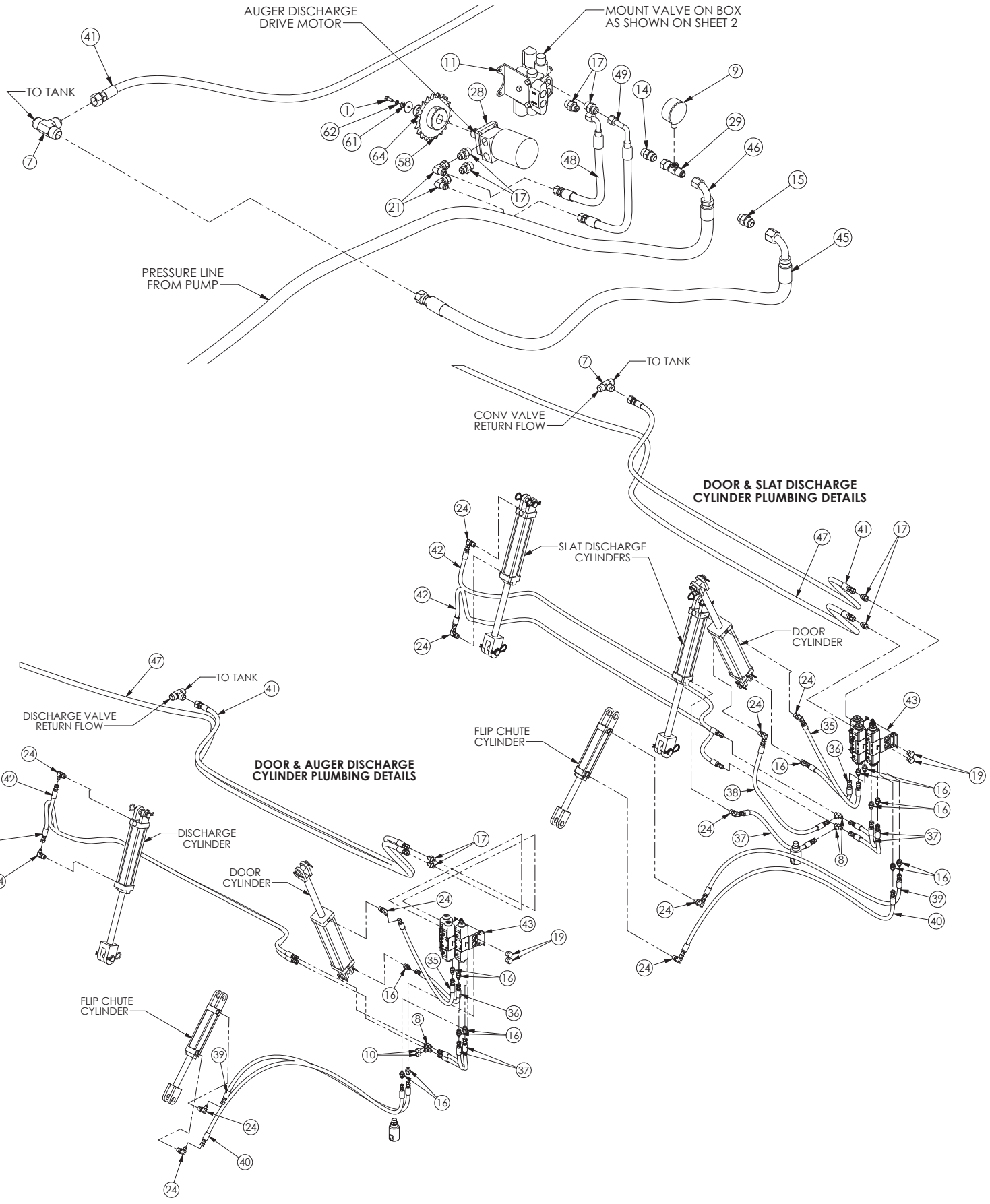

DISCHARGE HYDRAULIC ASSEMBLIES

MON900521 POWER DISCHARGE ASSEMBLY W/O FLIP CHUTE

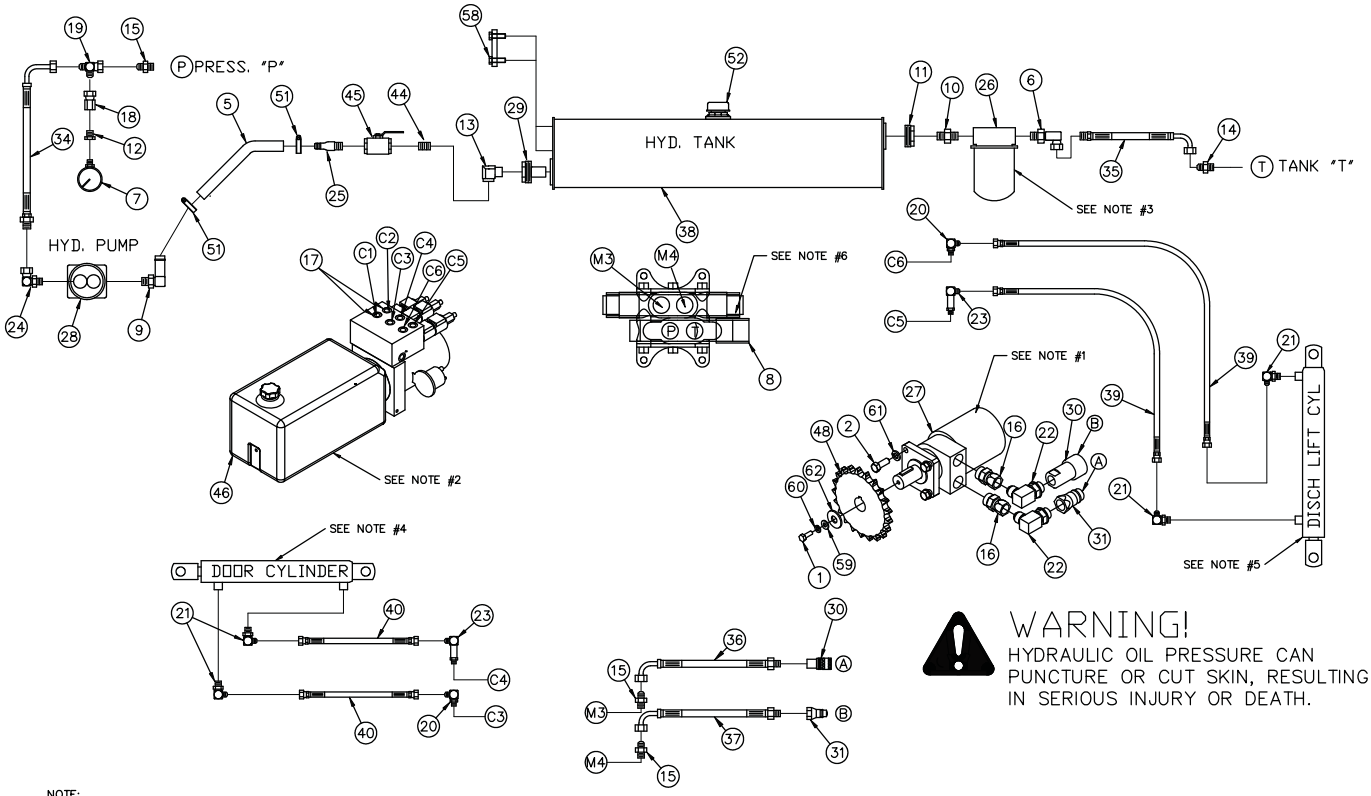

WARNING!
HYDRAULIC OIL PRESSURE CAN PUNCTURE OR CUT SKIN, RESULTING IN SERIOUS INJURY OR DEATH.

NOTE:
1) CONNECT CORRESPONDING LETTER TO DISCHARGE ORBIT MOTOR.
2) CONNECT HOSE TO CORRESPONDING PORT FOUND ON THE VALVE BANK.
3) REPLACEMENT FILTER PART NUMBER #MON800258
4) FOR DOOR CYLINDER SEE PRINT #MON900436, MON900486 MON900489, MON900495, MON900500.
5) FOR DISCHARGE CYLINDER SEE PRINT #MON900505, MON900506, MON900507, MON900508, MON900509, MON900510, MON900511, MON900512.
6) ATTACH TO BOTTOM SOLENOID WIRES.

ITEM #	QTY	PART #	DESCRIPTION
1	3	BLT14X34NC	1/4X3/4 BOLT
2	8	BLT38X1NC	3/8X1 BOLT
3	2	BLT516X1NC	5/16X1 BOLT
4	1	BLT516X34NC	5/16X3/4 BOLT
5	72	HYD114SUCHOSE	1 1/4" SUCTION HOSE
6	1	HYD1501-12-12	ELBOW ADAPTER
7	1	HYD3000FL	PRESSURE GAUGE
8	1	HYD38A1	SPOOL VALVE
9	1	HYD4601-20-16	ADAPTER
10	1	HYD5404-12-12	ADAPTER
11	1	HYD5406-16-12	ADAPTER
12	1	HYD5406-8-4	ADAPTER
13	1	HYD5502-20-20	ELBOW ADAPTER
14	1	HYD6400-10-10	ADAPTER
15	3	HYD6400-8-10	ADAPTER
16	1	HYD6402-10-8	ADAPTER
17	2	HYD6408-4	PLUG
18	1	HYD6506-8-8	ADAPTER
19	1	HYD6602-8-8-8	TEE ADAPTER
20	2	HYD6801-4-4	ELBOW ADAPTER
21	4	HYD6801-6-8	ELBOW ADAPTER
22	2	HYD6801-8-8	ELBOW ADAPTER
23	2	HYD6801LL-4-4	ELBOW ADAPTER
24	1	HYD6901-12-12	ELBOW ADAPTER
25	1	HYDE804	ADAPTER
26	1	HYDF11BA	FILTER ASSEMBLY
27	1	MON800598	HYDRAULIC MOTOR
28	1	MON800598	HYDRAULIC PUMP
29	1	HYDS25100RV3	STRAINER
30	2	HYDS2515	FEMALE COUPLER

ITEM #	QTY	PART #	DESCRIPTION
31	2	HYDS7115	MALE COUPLER
32	1	MON102564	SHIELD
33	*	MON600151	SWITCHBOX OPTIONS
34	1	MON700939	HYDRAULIC HOSE
35	1	MON700941	HYDRAULIC HOSE
36	1	MON700988	HYDRAULIC HOSE
37	1	MON700989	HYDRAULIC HOSE
38	1	MON700990	HYDRAULIC TANK
39	2	MON701167	HYDRAULIC HOSE
40	2	MON701168	HYDRAULIC HOSE
41	2	NUT14NC	1/4" NUT
42	4	NUT38NC	3/8" NUT
43	20	OILDEXTRON	OIL
44	1	PFBL114CLNIP	1 1/4" PIPE NIPPLE
45	1	PFBR114BVALVE	1 1/4" BALL VALVE
46	1	MON701335	HYDRAULIC POWER UNIT
47	1	SAC74188	POWER UINIT MOUNT
48	1	SPK60B21X1	SPROCKET
49	1	SCA170067	INDICATOR BRACKET
50	1	SCA170082	ARM REST
51	2	SPHC125	HOSE CLAMP
52	1	STI591765	BREATHER CAP
53	144	STI700221	HYDRAULIC OIL
54	192	STI700418	1GA BATTERY CABLE
55	4	STI700423	1G BATTEY CABLE LUG
56	1	STI701246	300 AMP FUSE
57	1	STI701247	FUSE HOLDER
58	1	STI702230	SIGHT GAUGE
59	3	WSH14FLAT	1/4" FLAT WASHER
60	3	WSH14LOCK	1/4" LOCK WASHER
61	8	WSH38LOCK	3/8" LOCK WASHER
62	2	WSH516FLAT	5/16" FLAT WASHER
63	3	WSH516LOCK	5/16" LOCK WASHER
64	1	WSH716FLAT	7/16" FLAT WASHER

DISCHARGE HYDRAULIC ASSEMBLIES

MON900516 SLIDE TRAY ASSEMBLY

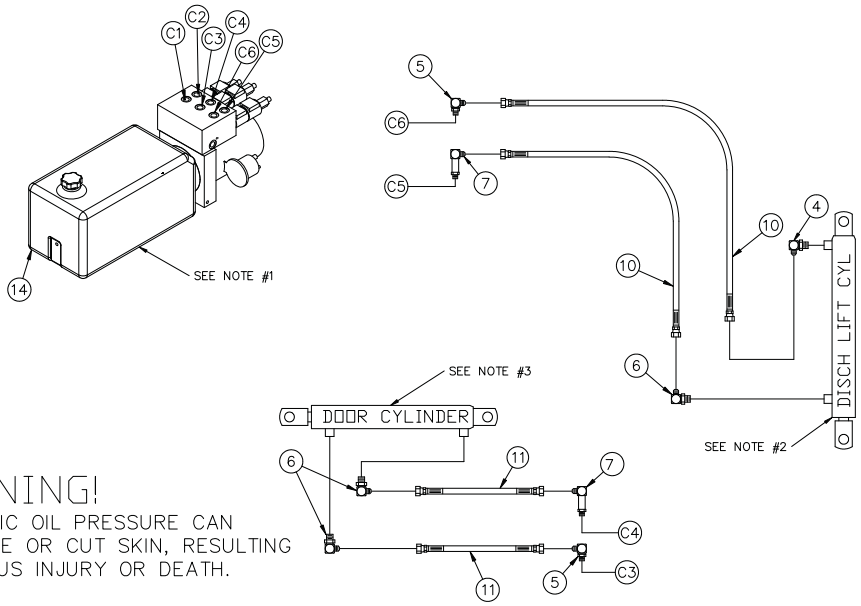

WARNING!
HYDRAULIC OIL PRESSURE CAN PUNCTURE OR CUT SKIN, RESULTING IN SERIOUS INJURY OR DEATH.

NOTE;
1) CONNECT HOSE TO CORRESPONDING PORT FOUND ON THE VALVE BANK.
2) FOR DISCHARGE CYLINDER SEE PRINT #MON900505, MON900506, MON900507, MON900508, MON900509, MON900510, MON900511, MON900512
3) FOR DOOR CYLINDER SEE PRINT #MON900436, MON900486, MON900489, MON900495, MON900500

ITEM #	QTY	PART #	DESCRIPTION
1	2	BLT14X34NC	1/4X3/4 BOLT
2	2	BLT516X1NC	5/16X1 BOLT
3	1	BLT516X34NC	5/16X3/4 BOLT
4	1	HYD6400-6-8	ADAPTER
5	2	HYD6801-4-4	ELBOW ADAPTER
6	3	HYD6801-6-8	ELBOW ADAPTER
7	2	HYD6801LL-4-4	ELBOW ADAPTER
8	1	MON102564	SHIELD
9	*	MON600151	SWITCHBOX OPTIONS
10	2	MON701167	HYDRAULIC HOSE
11	2	MON701168	HYDRAULIC HOSE
12	2	NUT14NC	1/4" NUT
13	20	OILDEXTRON	OIL
14	1	MON701335	HYDRAULIC POWER UNIT
15	1	SAC74188	POWER UINIT MOUNT
16	1	SCA170067	INDICATOR BRACKET
17	1	SCA170082	ARM REST
18	192	STI700418	1GA BATTERY CABLE
19	6	STI700423	1G BATTEY CABLE LUG
20	1	STI701246	300 AMP FUSE
21	1	STI701247	FUSE HOLDER
22	2	WSH14FLAT	1/4" FLAT WASHER
23	2	WSH14LOCK	1/4" LOCK WASHER
24	2	WSH516FLAT	5/16" FLAT WASHER
25	3	WSH516LOCK	5/16" LOCK WASHER

MON901027 PTO CONTROL CONSOLE ASSEMBLY

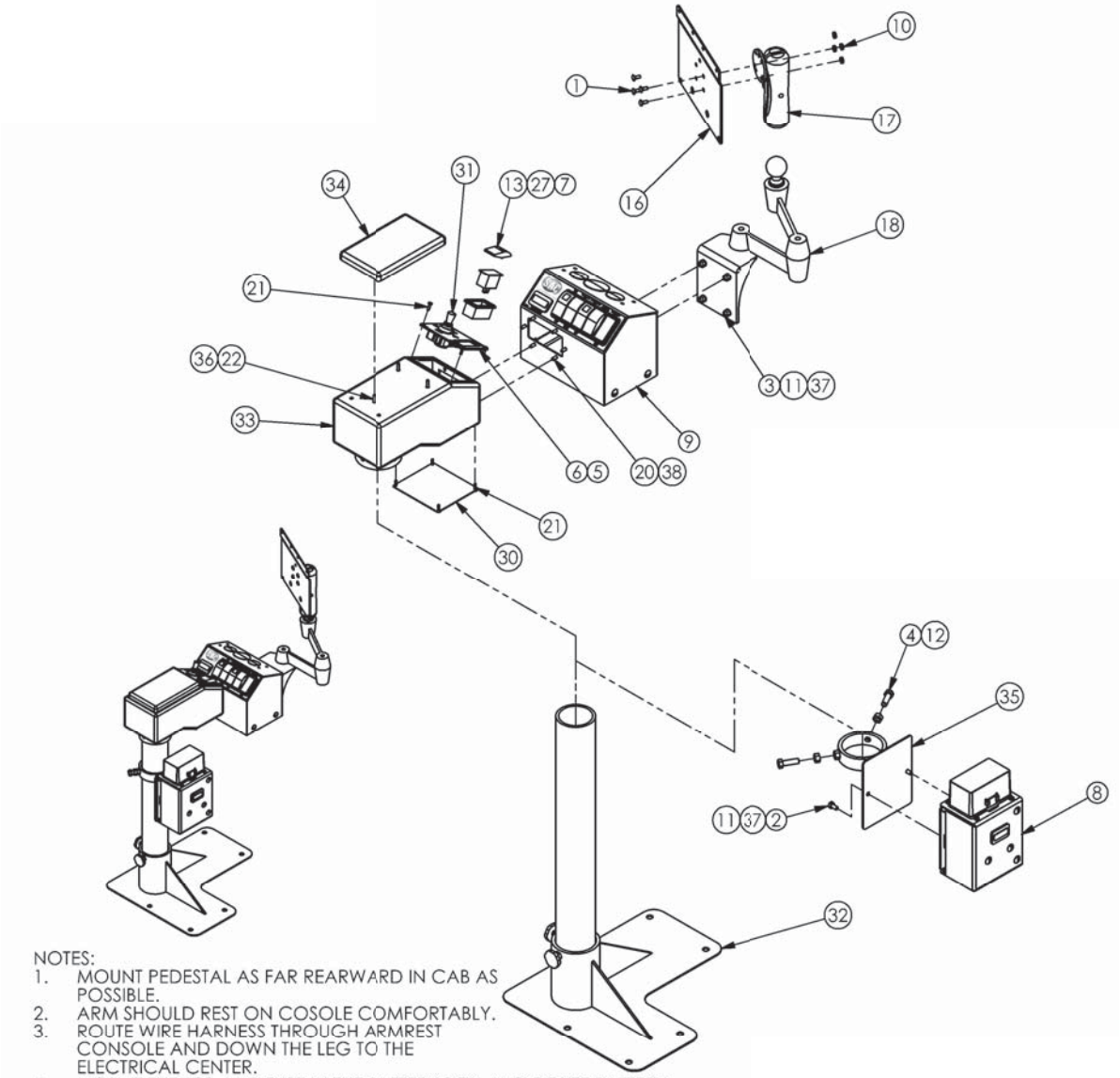

ITEM #	QTY	PART #	DESCRIPTION
1	4	BLT1024X12CNC	10-24X1/4 CARRIAGE BOLT
2	2	BLT14X12NC	1/4X1/2 BOLT
3	4	BLT14X34FNC	1/4X3/4 FLAT HEAD BOLT
4	2	BLT38X114NC	3/8X1-1/4 BOLT
5	1	DEC703	JOYSTICK BOX DECAL
6	1	MON104226	JOYSTICK PANEL
7	1	MON800629	SWITCH MOUNT
8	1	MON900981	AUX ELECTRIC BOX
9	1	MON901022	4 AUGER PTO SWITCHBOX
10	4	NUT1024TOOTHLCK	10-24 TOOTH LOCK NUT
11	6	NUT14NC	1/4" NUT
12	2	NUT38NC	3/8" NUT
13	1	PAC200281	RED LIGHT ROCKER SWITCH
14	1	SCA170008	10' POWER CABLE
15	1	SCA170053	15' CABLE W/ JUNCTION BOX
16	1	SCA404788	INDICATOR BRACKET
17	1	SCARAM101U	INDICATOR MOUNT
18	1	SCARAM109V1BU	INDICATOR SWING ARM
19	1	SPB14418	2-1/2" GROMMET

ITEM #	QTY	PART #	DESCRIPTION
20	6	SPMB1032X12	10-32X1/2 MACHINE BOLT
21	8	SPMB632X12	6-32X1/2 MACHINE BOLT
22	3	SPMB832X34	8-32X3/4 MACHINE BOLT
23	6	STI700279	TERMINAL RING
24	1	STI701245	100 AMP SLOW BLOW FUSE
25	1	STI701247	FUSE BLOCK
26	120	STI701743	4GA BLACK BATTERY CABLE
27	1	STI701958	ROCKER SWITCH
28	240	STI702453	1/2" BRAIDED WIRE LOOM
29	120	STI703630	4GA RED BATTERY CABLE
30	1	VM100667	BOTTOM CONSOLE COVER
31	1	VM700235	JOYSTICK SWITCH
32	1	VM800254	PEDISTAL BASE
33	1	VM800255	CONSOLE ARMREST
34	1	VM800256	ARMREST PAD
35	1	VM800309	CONSOLE MOUNTING PLATE
36	3	WSH#8TOOTHLOCK	#8 TOOTH LOCK WASHER
37	6	WSH14LOCK	1/4" LOCK WASHER
38	6	WSH5LOCKMM	5MM LOCK WASHER

MON901029 HYDRO CONTROL CONSOLE ASSEMBLY

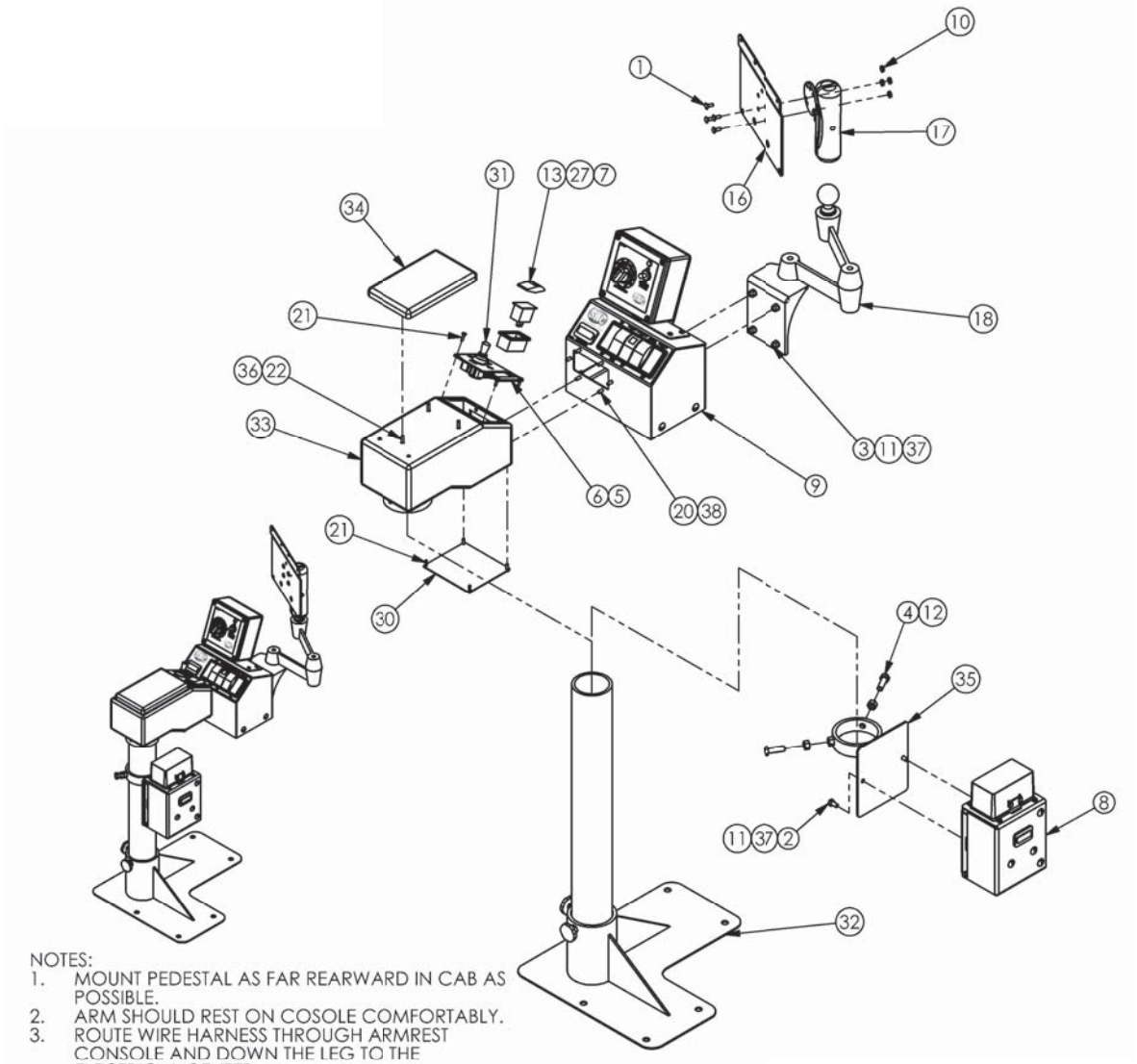

ITEM #	QTY	PART #	DESCRIPTION
1	4	BLT1024X12CNC	10-24X1/4 CARRIAGE BOLT
2	2	BLT14X12NC	1/4X1/2 BOLT
3	4	BLT14X34FNC	1/4X3/4 FLAT HEAD BOLT
4	2	BLT38X114NC	3/8X1-1/4 BOLT
5	1	DEC703	JOYSTICK BOX DECAL
6	1	MON104226	JOYSTICK PANEL
7	1	MON800629	SWITCH MOUNT
8	1	MON900981	AUX ELECTRIC BOX
9	1	MON901024	4 AUGER HYDRO SWITCHBOX
10	4	NUT1024TOOTHLCK	10-24 TOOTH LOCK NUT
11	6	NUT14NC	1/4" NUT
12	2	NUT38NC	3/8" NUT
13	1	PAC200281	RED LIGHT ROCKER SWITCH
14	1	SCA170008	10' POWER CABLE
15	1	SCA170053	15' CABLE W/ JUNCTION BOX
16	1	SCA404788	INDICATOR BRACKET
17	1	SCARAM101U	INDICATOR MOUNT
18	1	SCARAM109V1BU	INDICATOR SWING ARM
19	1	SPB14418	2-1/2" GROMMET

ITEM #	QTY	PART #	DESCRIPTION
20	6	SPMB1032X12	10-32X1/2 MACHINE BOLT
21	8	SPMB632X12	6-32X1/2 MACHINE BOLT
22	3	SPMB832X34	8-32X3/4 MACHINE BOLT
23	6	STI700279	TERMINAL RING
24	1	STI701245	100 AMP SLOW BLOW FUSE
25	1	STI701247	FUSE BLOCK
26	120	STI701743	4GA BLACK BATTERY CABLE
27	1	STI701958	ROCKER SWITCH
28	240	STI702453	1/2" BRAIDED WIRE LOOM
29	120	STI703630	4GA RED BATTERY CABLE
30	1	VM100667	BOTTOM CONSOLE COVER
31	1	VM700235	JOYSTICK SWITCH
32	1	VM800254	PEDISTAL BASE
33	1	VM800255	CONSOLE ARMREST
34	1	VM800256	ARMREST PAD
35	1	VM800309	CONSOLE MOUNTING PLATE
36	3	WSH#8TOOTHLOCK	#8 TOOTH LOCK WASHER
37	6	WSH14LOCK	1/4" LOCK WASHER
38	6	WSH5LOCKMM	5MM LOCK WASHER

SWITCH BOX ASSEMBLIES

SCA170076 POWER DISCHARGE SWITCH ASSEMBLY

THIS ASSEMBLY WAS AVAILABLE ON UNITS PRODUCED PRIOR TO 08-2015

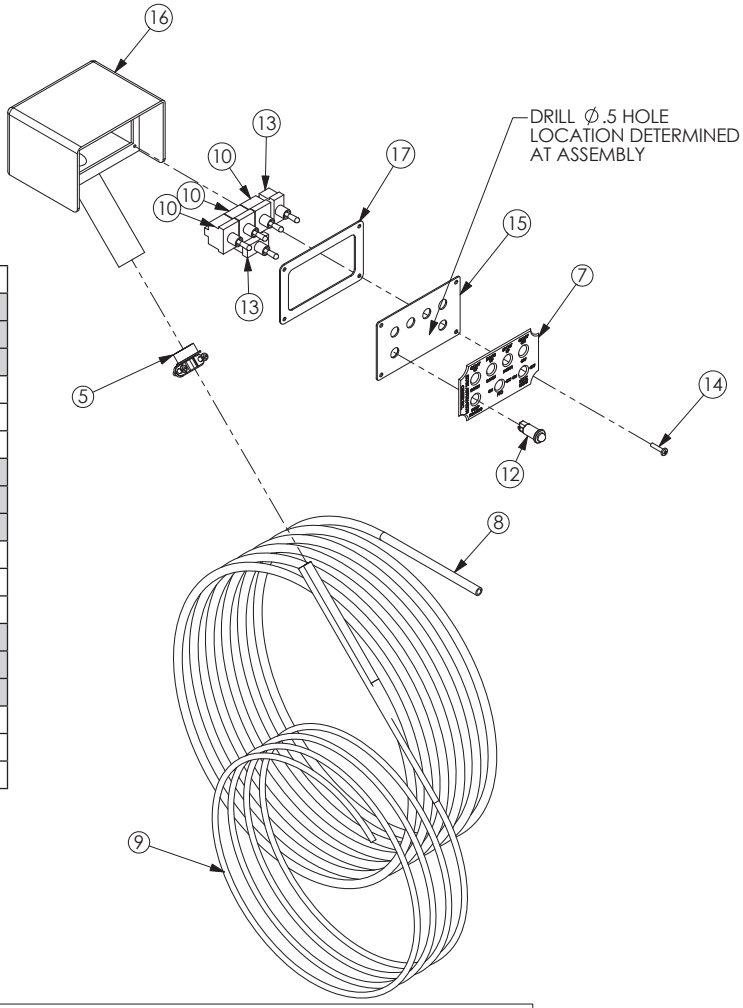

ITEM #	QTY	PART #	DESCRIPTION
1	2	JES3AG10A	10 AMP FUSE
2	4	JES422005	BUTT CONNECTOR
3	1	JES45215	RING TERMINAL
4	35	JES461065	FORK TERMINAL
5	1	JES6624	CORD CONNECTOR
6	1	JESYELFEMALEI	FEMALE SPADE TERMINAL
7	1	SACP10213	FACE DECAL
8	300	SCAC2412	12 WIRE 18 GAUGE CABLE
9	96	SCACPRD187	5 WIRE 18GAUGE CABLE
10	3	SCADPDTMOM	TOGGLE SWITCH
11	2	SCAINLINE	IN-LINE FUSE HOLDER
12	1	SCAL50171	LED LIGHT
13	3	SCASPSTSC	TOGGLE SWITCH
14	4	SPMB832X34SSP	8-32X3/4 MACHINE SCREW
15	1	STI100156	COVER PLATE
16	1	STI200109	CONTROL BOX
17	1	STI610809	REMOTE GASKET
18	35	STIWIRE12PR02	12GA RED WIRE

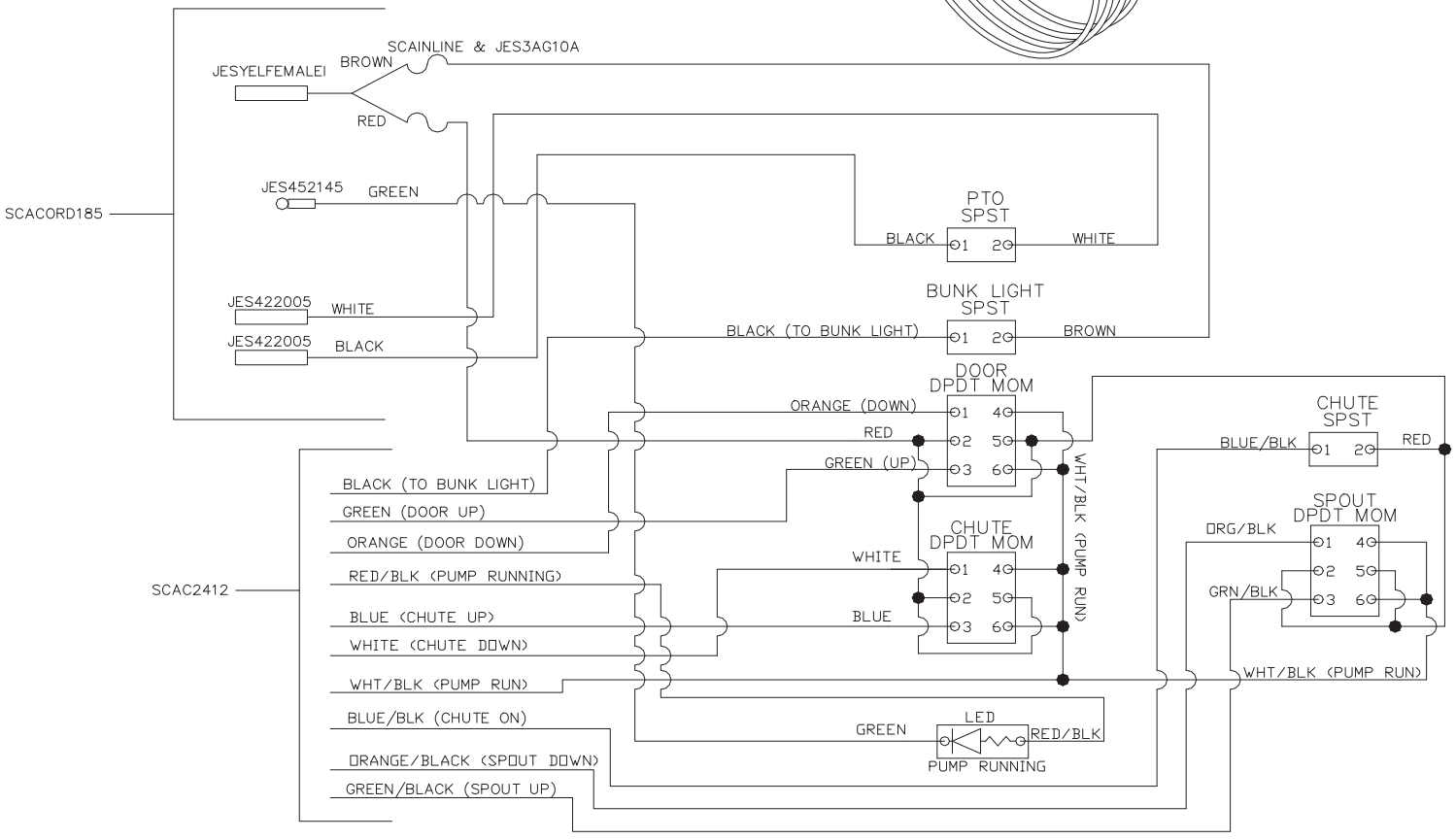

SWITCH BOX ASSEMBLIES

SCA170079 POWER DISCHARGE JOYSTICK ASSEMBLY

ITEM #	QTY	PART #	DESCRIPTION
1	1	DEC501	FACE DECAL
2	2	JES3AG10A	10 AMP GLASS FUSE
3	1	JES6624	3/4" ROMEX CORD CONNECTOR
4	6	JES31035	FEMALE WPACK TERMINAL
5	1	JES38049	WPACK 6 PIN TOWER
6	6	JES39000	WPACK WEATHER SEAL

ITEM #	QTY	PART #	DESCRIPTION
7	3	JES422005	BUTT CONNECTOR
8	2	JES452145	RING TERMIAL
9	15	JES461065	FORK TERMINAL
10	1	JESYELFEMALEI	FEMALE SPADE TERMINAL
11	1	MON103345	BOX COVER
12	1	SCA170089	JOYSTICK SWITCH
13	300	SCAC2412	12 WIRE 18 GAUGE CABLE
14	82	SCACPRD187	7 WIRE 18 GAUGE CABLE
15	1	SCADPDTMOM	TOGGLE SWITCH
16	2	SCAINLINE	IN-LINE FUSE HOLDER
17	1	SCAL50171	LED LIGHT
18	1	SCAL50175	GREEN LED LAMP
19	3	SCASPSTSC	TOGGLE SWITCH
20	4	SPMB832X34SSP	8-32X3/4 MACHINE SCREW
21	1	STI200109	CONTROL BOX
22	1	STI610809	REMOTE GASKET
23	2	STI700279	TERMINAL RING
24	33	STIWIRE14PR02	14GA RED WIRE

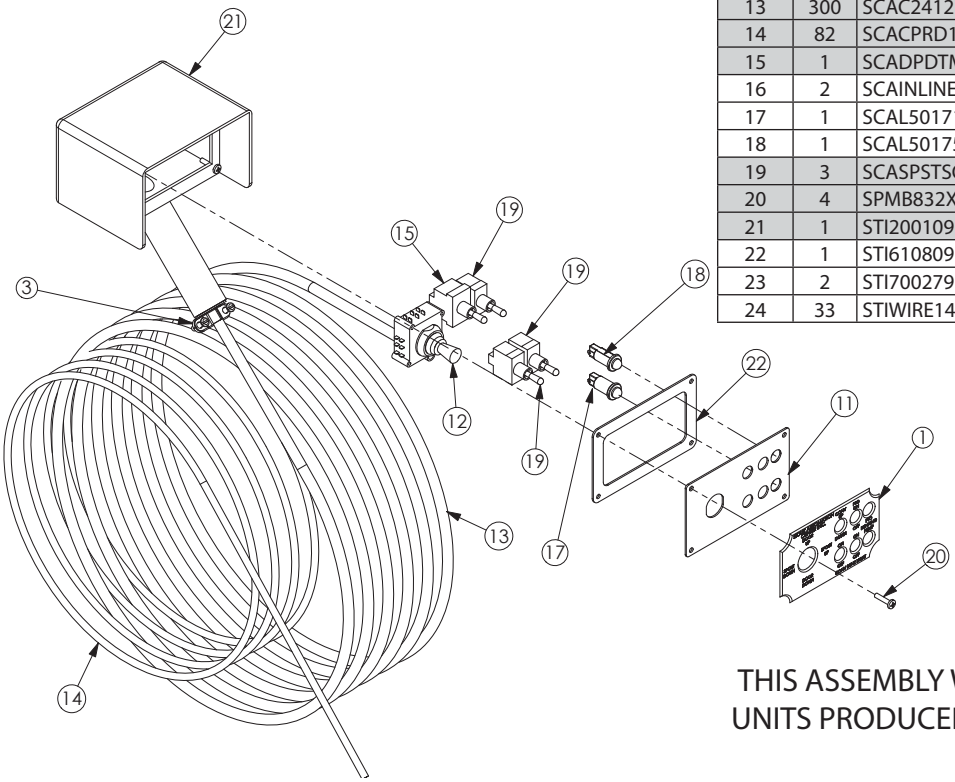

THIS ASSEMBLY WAS AVAILABLE ON
UNITS PRODUCED PRIOR TO 08-2015

NOTE:
1.) BLUE TO PTO BLUE.
2.) WHITE TO 12DC.
3.) BLACK TO PTO RED.

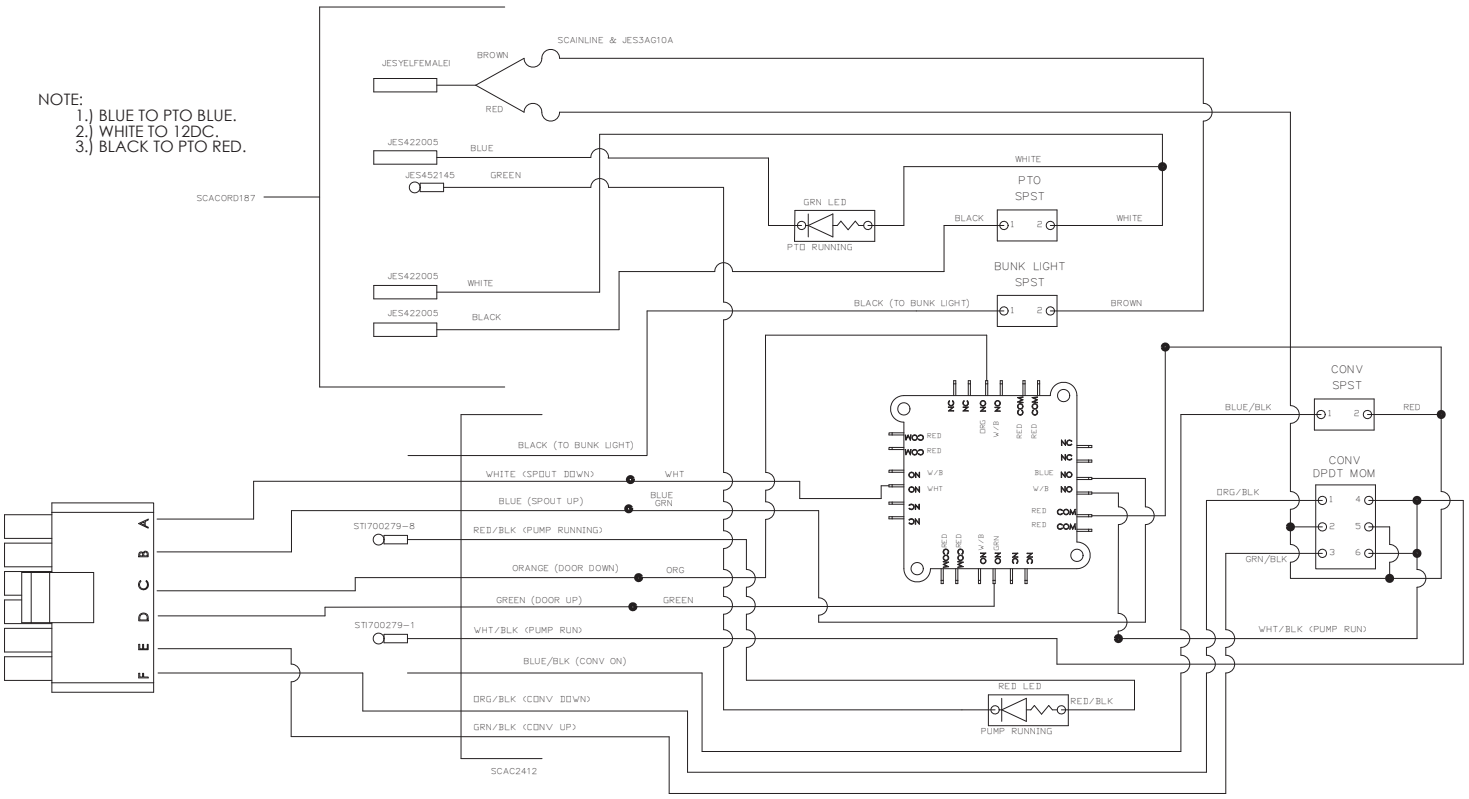

SWITCH BOX ASSEMBLIES

SCA170075 SLIDE TRAY SWITCH ASSEMBLY

THIS ASSEMBLY WAS AVAILABLE ON UNITS PRODUCED PRIOR TO 08-2015

ITEM #	QTY	PART #	DESCRIPTION
1	2	JES3AG10A	10 AMP FUSE
2	4	JES422005	BUTT CONNECTOR
3	1	JES452145	RING TERMINAL
4	1	JES461065	FORK TERMINAL
5	1	JES6624	CORD CONNECTOR
6	1	JESYELFEMALEI	FEMALE SPADE TERMINAL
7	1	SACP10211	FACE DECAL
8	240	SCAC2412	12 WIRE 18 GAUGE CABLE
9	96	SCACPRD187	5 WIRE 18GAUGE CABLE
10	2	SCADPDTMOM	TOGGLE SWITCH
11	1	SCAINLINE	IN-LINE FUSE HOLDER
12	1	SCAL50171	LED LIGHT
13	2	SCASPSTSC	TOGGLE SWITCH
14	4	SPMB832X34SSP	8-32X3/4 MACHINE SCREW
15	1	STI100156	COVER PLATE
16	1	STI200109	CONTROL BOX
17	1	STI610809	REMOTE GASKET
18	18	STIWIRE12PR02	12GA RED WIRE

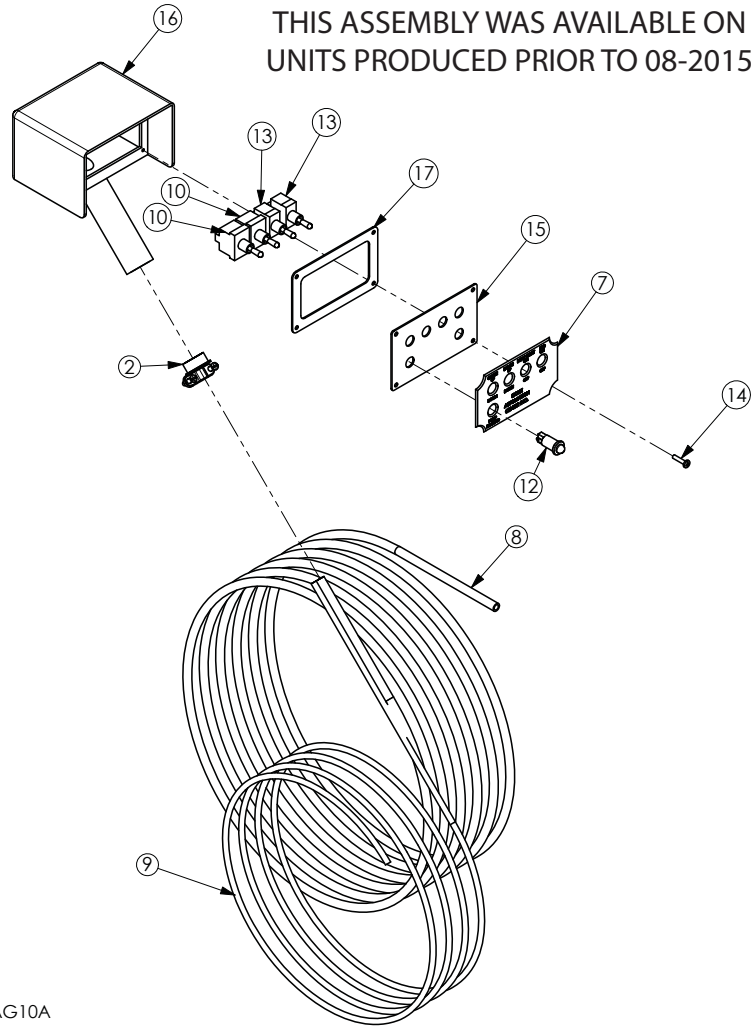

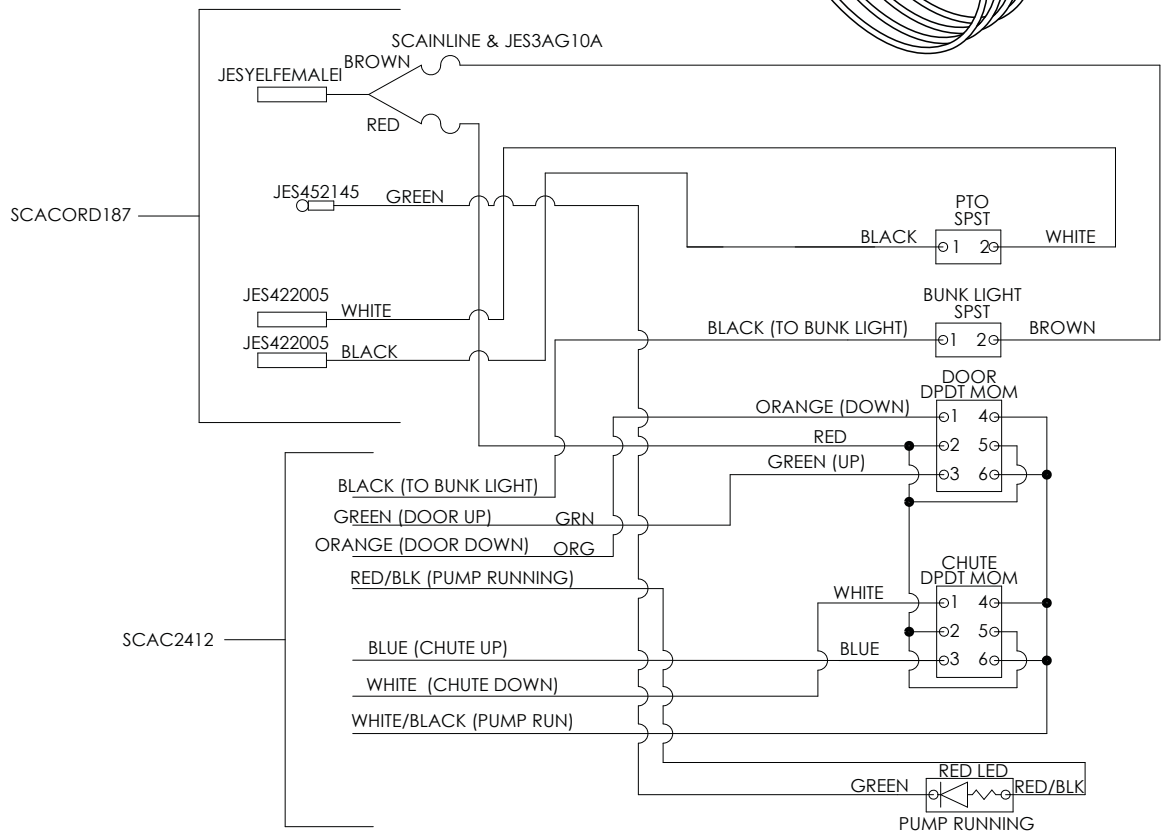

SWITCH BOX ASSEMBLIES

SCA170081 SLIDE TRAY JOYSTICK ASSEMBLY

ITEM #	QTY	PART #	DESCRIPTION
1	1	DEC504	FACE DECAL
2	2	JES3AG10A	10 AMP GLASS FUSE
3	1	JES6624	3/4" ROMEX CONNECTOR
4	4	JES31035	FEMALE WPACK TERMINAL
5	1	JES38047	WPACK 4 PIN TOWER
6	6	JES39000	WPACK WEATHER SEAL

ITEM #	QTY	PART #	DESCRIPTION
7	3	JES422005	BUTT CONNECTOR
8	1	JES452145	TERMINAL RING
9	4	JES461065	FORK TERMINAL
10	1	JESYELFEMALEI	FEMALE SPADE TERMINAL
11	1	MON103345	BOX COVER
12	1	SCA170089	JOYSTICK SWITCH
13	240	SCAC2412	12 WIRE 18 GAUGE CABLE
14	82	SCACPRD187	7 WIRE 18 GAUGE CABLE
15	2	SCAINLINE	IN-LINE FUSE HOLDER
16	1	SCAL50171	LED LIGHT
17	1	SCAL50175	GREEN LED LAMP
18	2	SCASPSTSC	TOGGLE SWITCH
19	4	SPMB832X34SSP	8-32X3/4 MACHINE SCREW
20	1	STI200109	CONTROL BOX
21	1	STI610809	REMOTE GASKET
22	2	STI700279	TERMINAL RING
23	18	STIWIRE14PR02	14GA RED WIRE

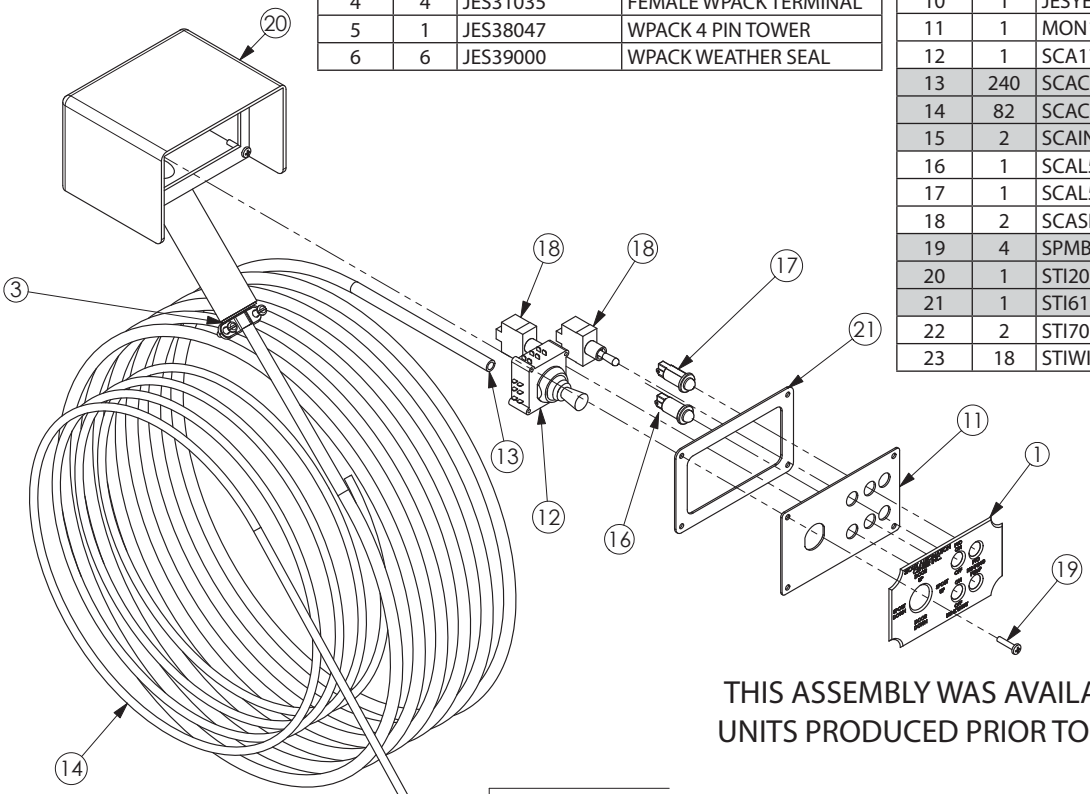

THIS ASSEMBLY WAS AVAILABLE ON
UNITS PRODUCED PRIOR TO 08-2015

NOTE:
1.) BLUE TO PTO BLUE.
2.) WHITE TO 12V DC.
3.)BLACK TO PTO RED.

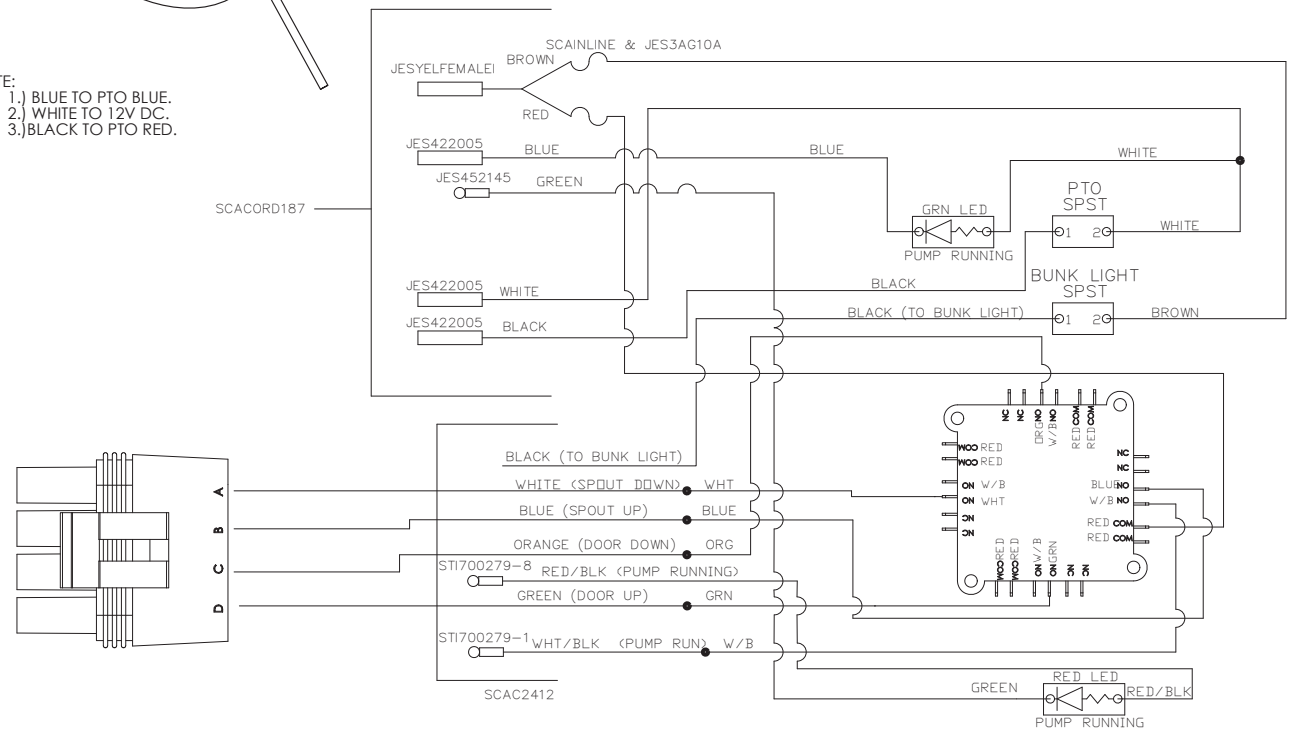

NOTE:
1.) BOTTOM VIEW OF SWITCHES
2.) REMOVE 26" OF THE SHIELDING ON THE SCAC2412, CUTTING 24" OFF THE WIRES TO THE WEATHERPACK TO PRODUCE A 24" LONGER WIRE ON THE RED/BLK, AND WHT/BLK.
3.) CUT 14" OFF OF THE BLACK WIRE SO IT IS 10" LONGER THAN THE WEATHERPACK WIRES.
4.) CUT BACK REMAINING 5 WIRES TO SHIELDING.

DRIVELINE ASSEMBLIES

SAC26016 PTO DRIVELINE ASSEMBLY

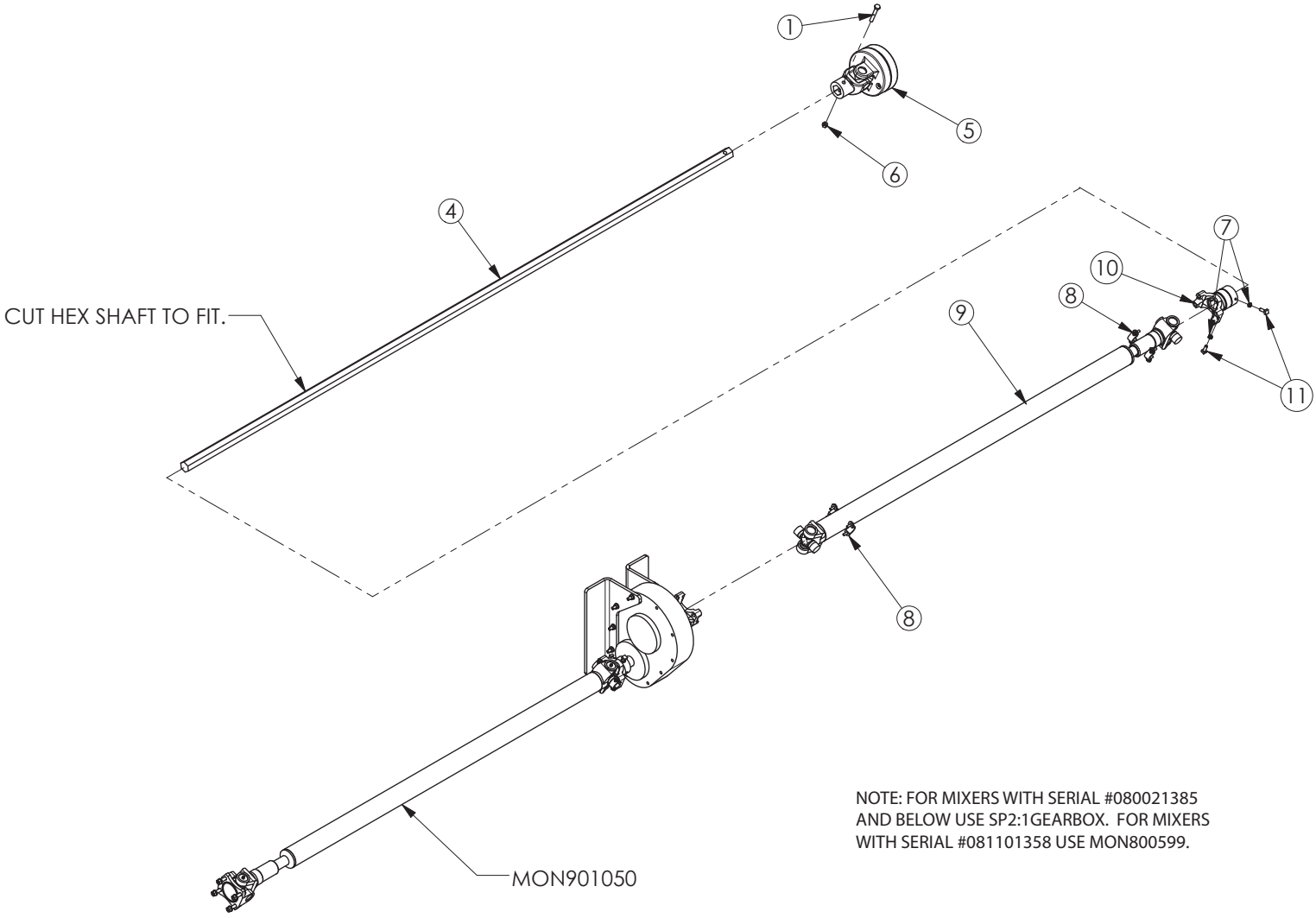

NOTE: FOR MIXERS WITH SERIAL #080021385 AND BELOW USE SP2:1GEARBOX. FOR MIXERS WITH SERIAL #081101358 USE MON800599.

ITEM #	QTY	PART #	DESCRIPTION
1	1	BLT38X234NC	3/8X2-3/4 BOLT
2	1	HYD6400-4-4R	04 MJIC X 04 MORG ADAPTER
3	1	HYD6500-4-4	04 MJIC X 04 FJIC ELBOW ADAPTER
4	1	MON101898	HEX SHAFT
5	1	MON800398	SHEAR YOKE
6	1	NUT38LOCKNC	3/8" LOCK NUT
7	2	NUT516JAMNC	5/16" JAM NUT
8	2	PTO3-70-28X	PTO U-BOLT
9	1	SAC75757	DRIVELINE
10	1	SAC75811	PTO YOKE
11	2	SPSQHNC516X1	5/16X1 SQUARE HD SED SCREW

MON901050 PTO DRIVELINE ASSEMBLY

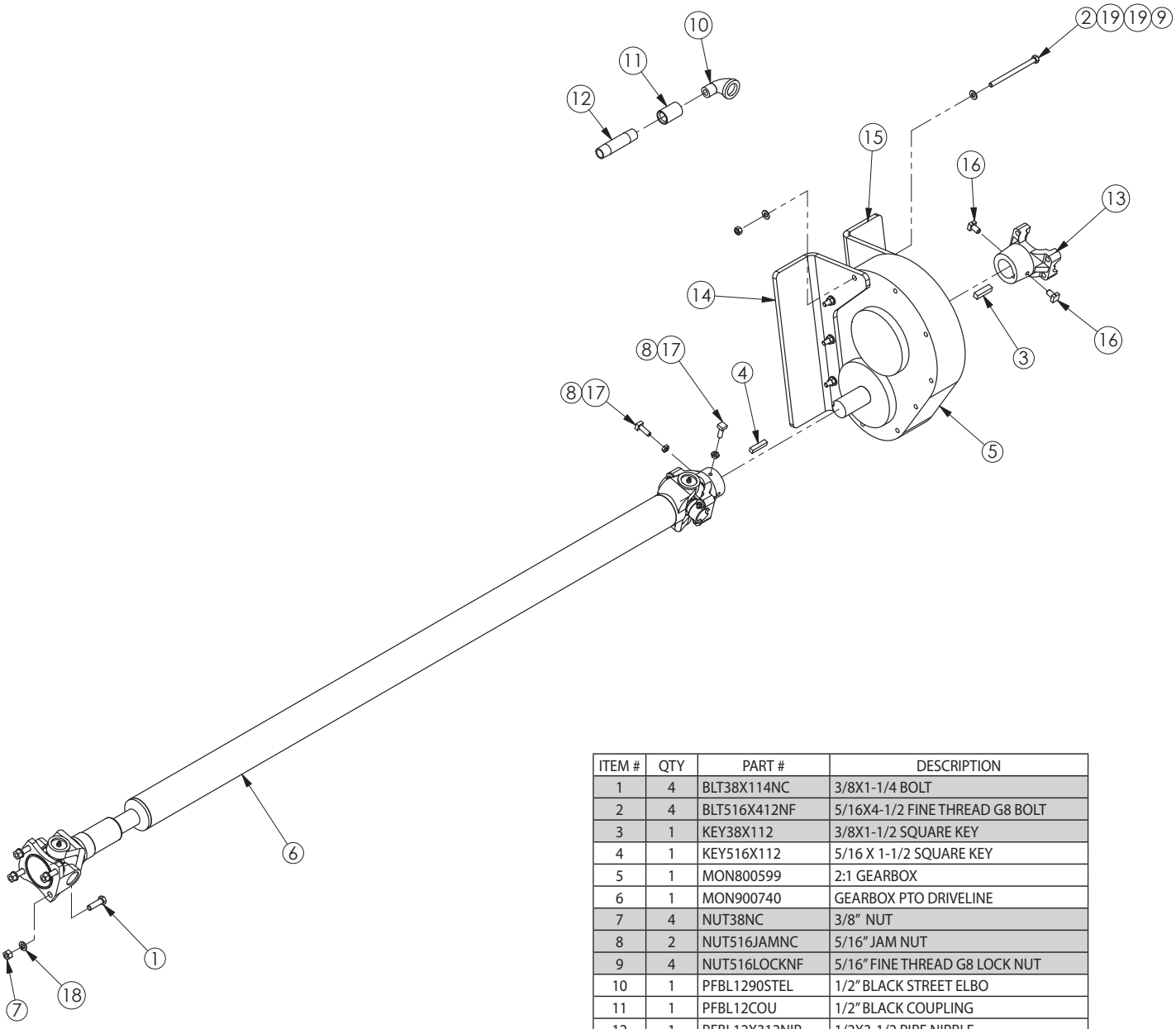

ITEM #	QTY	PART #	DESCRIPTION
1	4	BLT38X114NC	3/8X1-1/4 BOLT
2	4	BLT516X412NF	5/16X4-1/2 FINE THREAD G8 BOLT
3	1	KEY38X112	3/8X1-1/2 SQUARE KEY
4	1	KEY516X112	5/16 X 1-1/2 SQUARE KEY
5	1	MON800599	2:1 GEARBOX
6	1	MON900740	GEARBOX PTO DRIVELINE
7	4	NUT38NC	3/8" NUT
8	2	NUT516JAMNC	5/16" JAM NUT
9	4	NUT516LOCKNF	5/16" FINE THREAD G8 LOCK NUT
10	1	PFBL1290STEL	1/2" BLACK STREET ELBO
11	1	PFBL12COU	1/2" BLACK COUPLING
12	1	PFBL12X312NIP	1/2X3-1/2 PIPE NIPPLE
13	1	PTO3-4-333	1.5 X 1.825 ROUND YOKE
14	1	SAC60546	FRONT RIGHT ANGLE GEARBOX MOUNT
15	1	SAC60547	REAR RIGH ANGLE GEARBOX MOUNT
16	2	SPSQHNC38X58H	3/8X5/8 SQUARE HEAD SET SCREW
17	2	SPSQHNC516X1	5/16X1 SQUARE HEAD SET SCREW
18	4	WSH38LOCK	3/8 LOCK WASHER
19	8	WSH516FLATG8	5/16" G8 FLAT WASHER

SP2.1GEARBOX ASSEMBLY

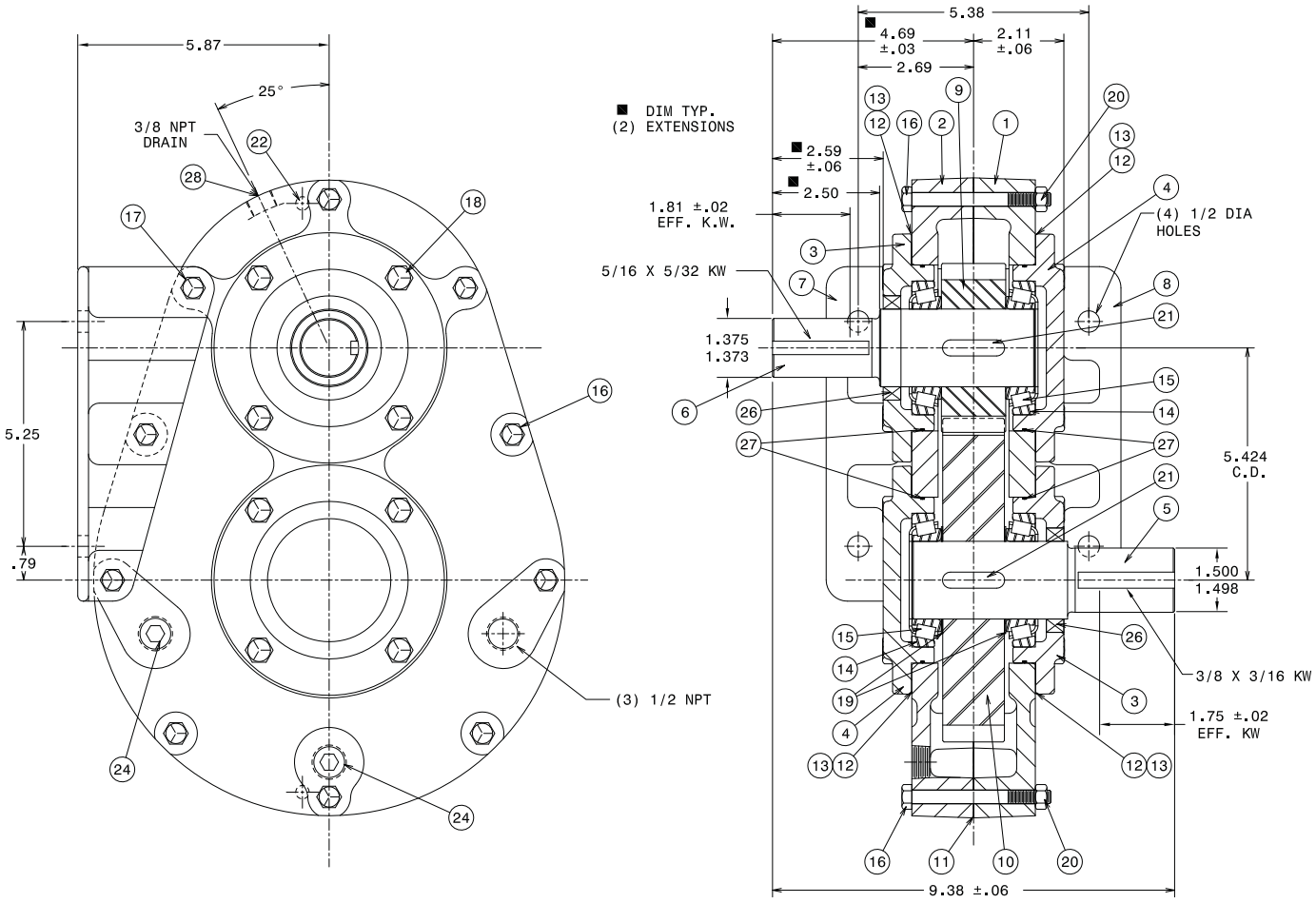

ITEM #	QTY	PART #	DESCRIPTION
1	1	0223-00164	HOUSING HALF
2	1	0225-00439	HOUSING HALF
3	2	0223-00166	OPENED CAP
4	2	OSW831721	CLOSED CAP
5	1	SAC35294	OUTPUT SHAFT
6	1	0225-01266	INPUT SHAFT
7	1	0223-00169	MOUNTING BRACKET
8	1	0223-00170	MOUNTING BRACKET
9	1	0223-00178	20 TOOTH LH GEAR
10	1	SP0223-00174	40 TOOTH RH GEAR
11	1	OSW831728	GASKET
12	8	MPRM344215	.002 SHIM (RED)
13	8	MPRM344215A	.005 SHIM (BLUE)
14	4	TIM18620	BEARING CUP

ITEM #	QTY	PART #	DESCRIPTION
15	4	TIM18690	BEARING CUP
16	7	BLT516X314NC	5/16X3-1/4 BOLT
17	3	BLT516X4NC	5/16X4 BOLT
18	16	BLT38X1NC	3/8X1 BOLT
19	2	OSW833780	SHIM
20	10	NUT516NC	5/16 NUT
21	2	8471705050	3/8 KEY X 1-7/16
22	2	8471709001	DOWEL PIN
23	1	8631251002	1/2X1/8NPT PIPE
24	2	SP8631261004	1/2NPT PLUG
25	1	8631271001	VENTED PLUG
26	2	SELCR18039	SEAL
27	4	8748009070	O-RING
28	1	PFBL38PLUG	3/8 PLUG

APPENDIX

OIL SPECIFICATIONS FOR DROP GEARBOX

OIL CHANGE: After initial 100 hours, then every 1000 hours or annually thereafter. These intervals may be modified depending on the actual operating conditions. If used on seasonal equipment, it is recommended that the oil be changed at the end of each season to remove moisture and corrosive contaminants.

OIL FILL LEVEL: Unit should be filled with aprroximately 1.5 pints of gear lube so that the oil is to the top of the filler neck or to the middle of the sight guage. (if so equipped)

OIL TYPE: EP 80 to 90 WT gear lube, Viscosity Index of 93 and a viscosity of 780 @ 100 degrees F SUS and 76.7 @ 210 degrees F SUS is recommended.

GEARBOX TEMPERATURE: ***DO NOT EXCEED 200 DEGREES F.***

OIL SPECIFICATIONS FOR HYDRAULIC SYSTEM

OIL CHANGE: Normal change intervals of 1000 hours or annually should be followed. If used on seasonal equipment, it is recommended that the oil be changed at the end of each season to remove moisture and corrosive contaminants.

OIL FILL LEVEL: Oil in the hydraulic tank should be maintained at a level that is 2" below the filler cap or visible in the sight gage, if so equipped.

OIL TYPE: Hydraulic Oil Viscosity Index of 140, with a viscosity of 281 @ 100 degrees F SUS and 56.5 @ 210 degrees F SUS is recommended.

OIL TEMPERATURE: ***DO NOT EXCEED 170 DEGREES F.***

OIL SPECIFICATIONS FOR ELECTRIC HYDRAULIC UNIT

OIL CHANGE: Normal change intervals of 1000 hours or annually should be followed. Oil should be changed with the hydraulic cylinders retracted.

OIL FILL LEVEL: With the hydraulic cylinders retracted, fill the reservior to 1-1/2" below the filler cap. (approximately 2 gallons)

OIL TYPE: Dextron III Automatic Transmission Fluid

OIL TERMPERATURE: ***DO NOT EXCEED 200 DEGREES F.***

DRIVELINE ASSEMBLIES

MON900740 PTO DRIVELINE

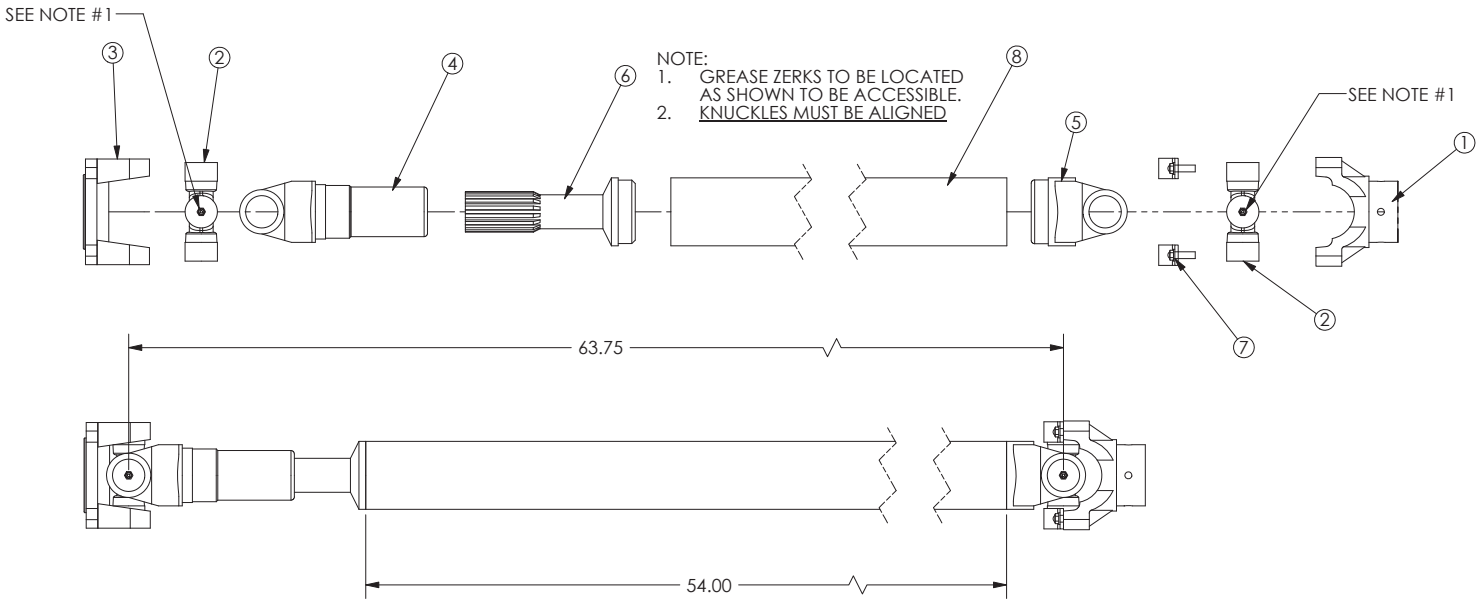

ITEM #	QTY	PART #	DESCRIPTION
1	1	DM100539	ROUND YOKE
2	2	PTO2-0052	1.188 CAPZERK CROSS
3	1	PTO3-2-119	1350 FLANGE YOKE
4	1	PTO3-3-598KX	SLIP SLEEVE YOKE
5	1	PTO-28-47	YOKE
6	1	PTO3-40-1471	SLIP YOKE SHAFT
7	1	PTO3-70-28X	CROSS RETAINER KIT
8	1	SAC300078	DRIVELINE TUBE

SAC75757 PTO DRIVELINE

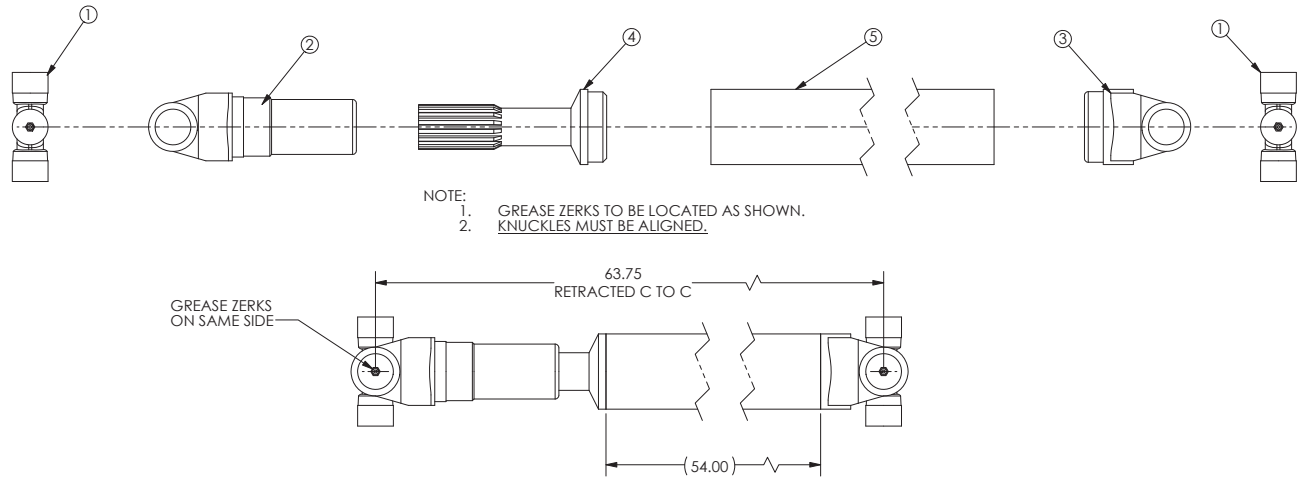

ITEM #	QTY	PART #	DESCRIPTION
1	2	PTO2-0052	1.188 CAPZERK CROSS
2	1	PTO3-3-598KX	SLIP YOKE SLEEVE
3	1	PTO-28-47	YOKE
4	1	PTO3-40-1471	SLIP YOKE SHAFT
5	1	SAC300078	DRIVELINE TUBE

NOTES

DRIVELINE ASSEMBLIES

MON901010-1 4600 HYDRO DRIVE ASSEMBLY

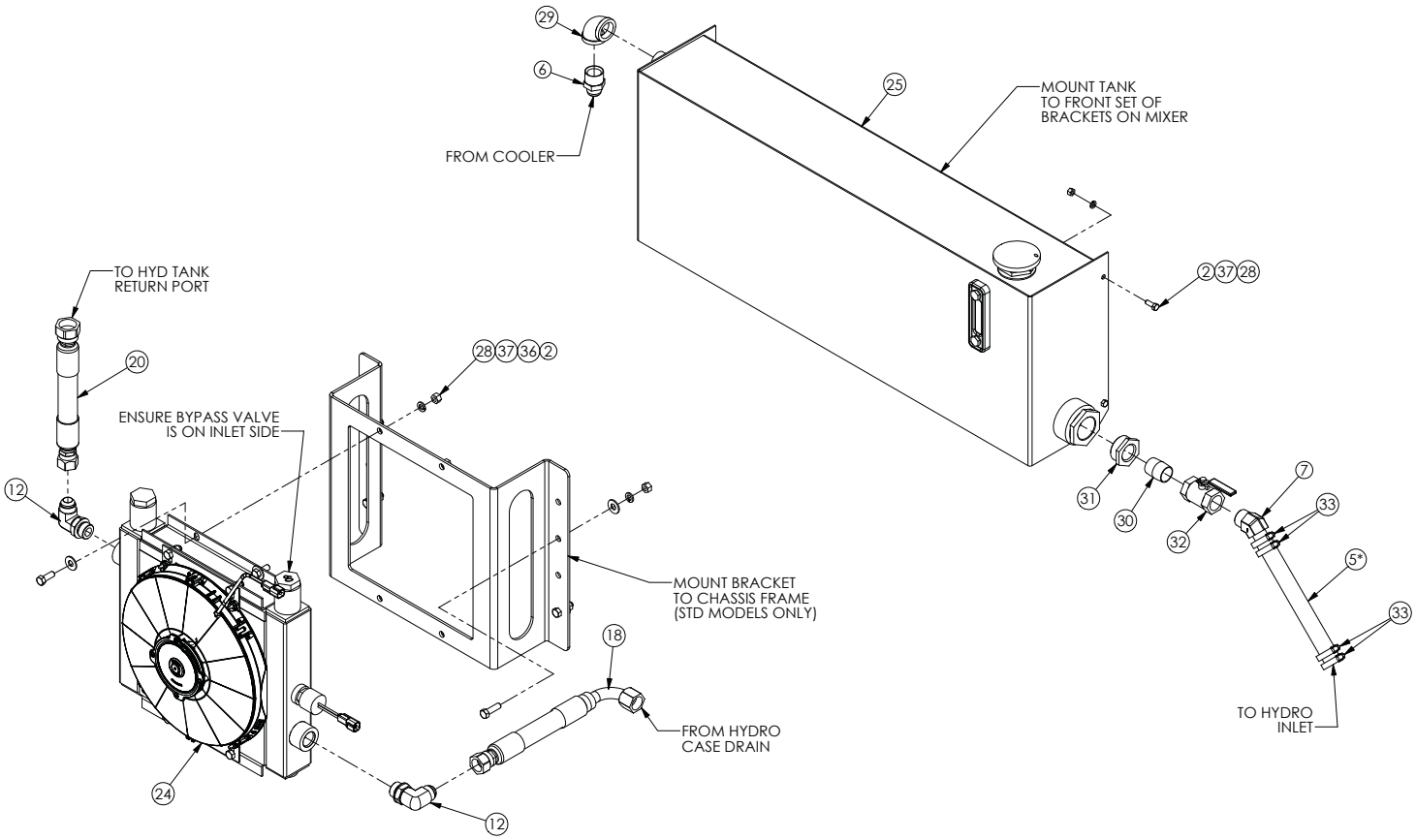

HOSES MARKED WITH * ARE TO BE CLEANED
WITH PROJECTILES PRIOR TO INSTALLATION.

ITEM #	QTY	PART #	DESCRIPTION
1	4	BLT12X112NC	1/2X1-1/2 BOLT
2	8	BLT38X1NC	3/8X1 BOLT
3	1	HYD10000FLBM	10K PRESSURE GAUGE
4	1	HYD1000FLBM	1K PRESSURE GAUGE
5*	225	HYD114SUCHOSE	1-1/4" SUCTION HOSE
6	1	HYD2404-16-20	16 MJIC X 20 MP ADAPTER
7	1	HYD4503-20	1-1/4 HB X 20 MP 45 ELBOW
8	1	HYD4603-20-20	1-1/4 HB X 20 MORG 45 ELBOW
9	1	HYD5406-8-4	08 MP X 04 FP BUSHING
10	2	HYD6400-12-12	12 MJIC X 12 MORG ADAPTER
11	1	HYD6410-16-20	16 MORG X 20 FORG ADAPTER
12	3	HYD6801-12-12	12 MJIC X 12 MORG ELBOW ADAPTER
13	1	HYD6805-08-08	08 MORG X 08 FP ELBOW ADAPTER
14	1	HYD6900-4-4	04 MORG X 04 FP UNION ADAPTER
16	2	HYDFF6892-16-16	SPLIT FLANGE ADAPTER
16	1	HYDP176566	10 MICRON FILTER
17	4	HYDSFK62-16	CODE 62 1" SPLIT FLANGE
18	1	MON701615	HYDRAULIC HOSE
19*	2	MON701617	HYDRAULIC HOSE

ITEM #	QTY	PART #	DESCRIPTION
20	1	MON701618	HYDRUALIC HOSE
21	1	MON701626	HYDRAULIC HOSE
22	1	MON701643	FAN POWER WIRE HARNESS
23	1	MON800617	6.4 HYDRAULIC MOTOR
24	1	MON800635	OIL COOLER
25	1	MON900397	30 GALLON HYDRAULIC TANK
26	0	MON900783	HYDRO DRIVELINE KIT
27	1	MON901019	4600 DRIVELINE KIT
28	8	NUT38NC	3/8" NUT
29	1	PFBL11490EL	1-1/4" BLACK PIPE ELBOW
30	1	PFBL114CLNIP	1 1/4" CLOSE BLACK NIPPLE
31	1	PFBL2X114BUS	2" MALE TO 1-1/4" FEMALE BUSHING
32	1	PFBR114BVALVE	1-1/4" BRASS BALL VALVE
33	4	SPHC125	1-1/4" HOSE CLAMP
34	280	STI700221	HYDRUALIC OIL (PINTS)
35	4	WSH12LOCK	1/2" LOCK WASHER
36	4	WSH38FLAT	3/8" FLAT WASHER
37	8	WSH38LOCK	3/8" LOCK WASHER

DRIVELINE ASSEMBLIES

MON901010-1 4600 HYDRO DRIVE ASSEMBLY

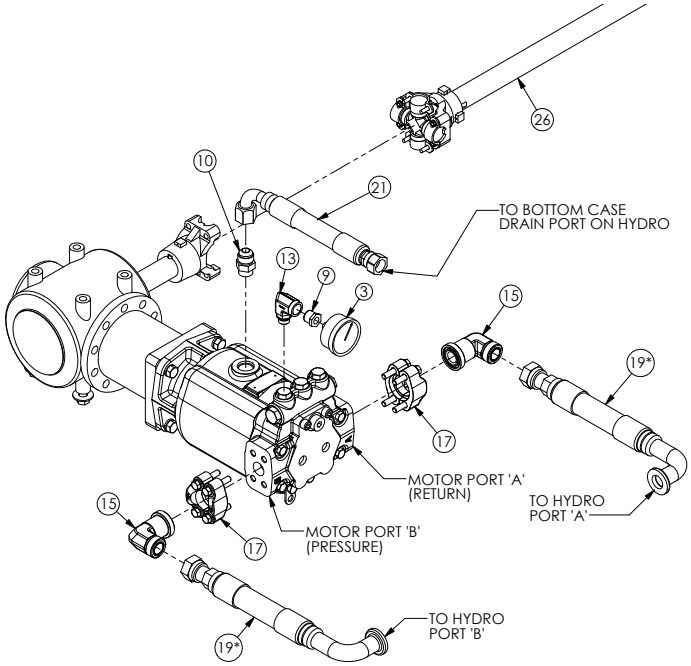

HDR MOTOR MOUNTING AND PLUMBING

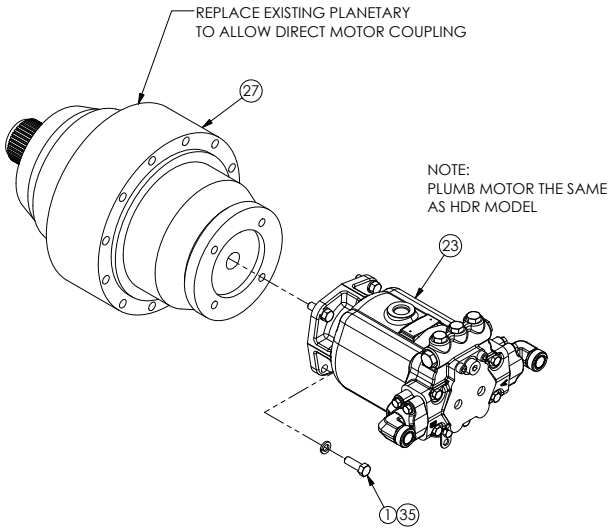

4600 MOTOR MOUNTING AND PLUMBING

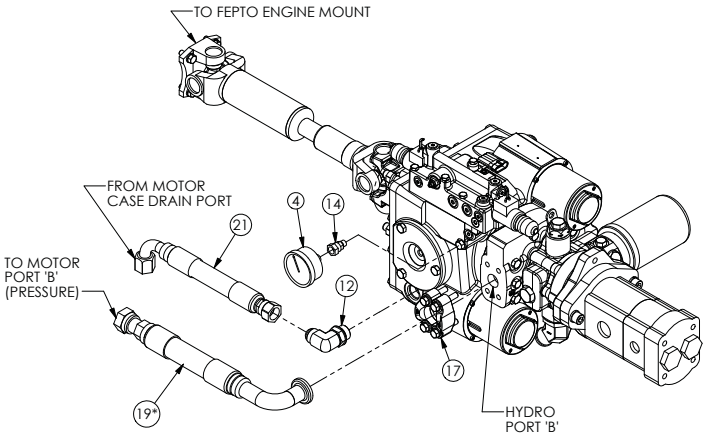

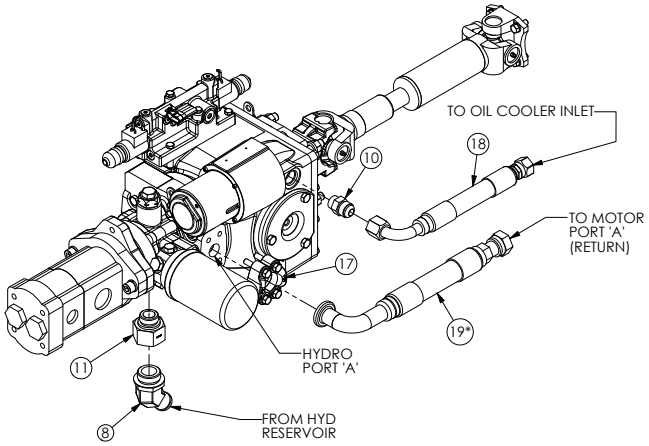

MON900420 HYDRO DRIVELINE

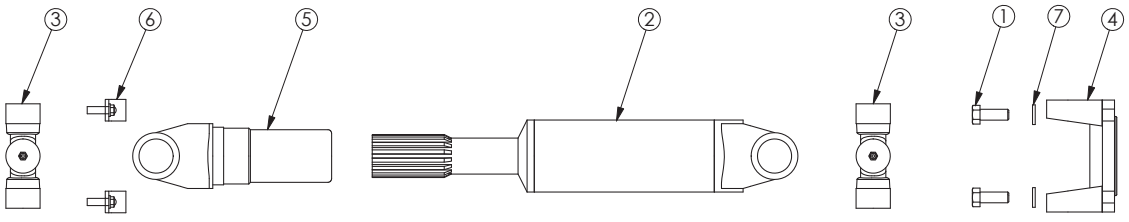

ITEM #	QTY	PART #	DESCRIPTION
1	4	BLT38X1NF	3/8X1 G8 FINE THRD BOLT
2	1	MON700685	DRIVELINE TUBE
3	2	PTO2-0052	1.88 CROSS W/ ZERK
4	1	PTO3-2-119	1350 SERIES YOKE
5	1	PTO3-3-598KX	SLIP SLEEVE YOKE
6	1	PTO3-70-28X	CROSS U-BOLT
7	4	WSH38LOCK	3/8" LOCK WASHER

DRIVELINE ASSEMBLIES

MON901049-1 4600 HYDRO PUMP ASSEMBLY

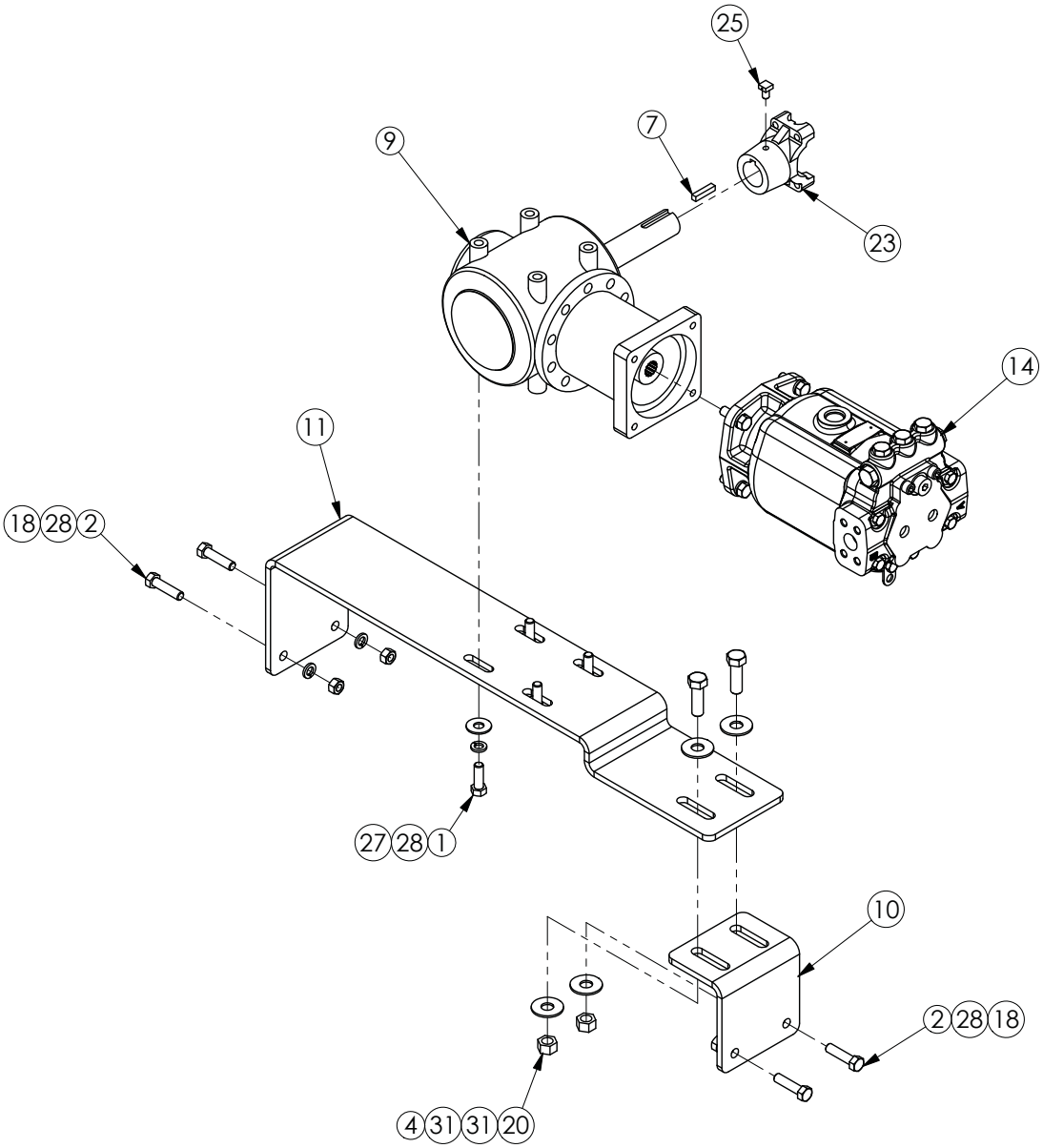

ITEM #	QTY	PART #	DESCRIPTION
1	0	BLT12X112NC	1/2X1-1/2 BOLT
2	0	BLT12X2NC	1/2X2 BOLT
3	2	BLT38X1NC	3/8X1 BOLT
4	0	BLT58X2NC	5/8X2 BOLT
5	4	BLT58X2NCG8	5/8X2 G8 BOLT
6	4	BLT916X2NF	9/16X2 FINE THREAD G8 BOLT
7	0	KEY516X112	5/16X1-1/2 KEY
8	1	MON101479	HYDROSTAT MOUNT
9	0	MON102394	RIGHT ANGLE GEARBOX
10	0	MON102451	4900 GEARBOX BRACKET
11	0	MON103146	HYDRO GEARBOX BRACKET
12	2	MON104152	8" CHANNEL CAP
13	1	MON800616	CCW 6.4 HYDRAULIC PUMP
14	0	MON800617	C62 6.4 HYDRAULIC MOTOR
15	1	MON800623	TANDEM HUYDRAULIC PUMP
16	1	MON900420	2090 HYDRO DRIVELINE
17	1	MON901038	HYDRO PUMP HOOD KIT
18	0	NUT12NC	1/2" NUT

ITEM #	QTY	PART #	DESCRIPTION
19	2	NUT38WING	3/8" WING NUT
20	0	NUT58LOCKNC	5/8" LOCK NUT
21	4	NUT58LOCKNCG8	5/8" NC G8 LOCK NUT
22	4	NUT916LOCKNF	9/16" FINE THREAD G8 LOCK NUT
23	0	PTO3-4-333	ROUND YOKE
24	2	SPDHB12X2NC	1/2X2 SOCKET HEAD BOLT
25	0	SPSQHNC35X58H	3/8X5/8 SQUARE HEAD BOLT
26	50	STI703282	WEATHER STRIPPING
27	4	WSH12FLAT	1/2" FLAT WASHER
28	2	WSH12LOCK	1/2" LOCK WASHER
29	2	WSH38FLAT	3/8" FLAT WASHER
30	2	WSH38LOCK	3/8" LOCK WASHER
31	0	WSH58FLAT	5/8" FLAT WASHER
32	4	WSH58FLATG8	5/8" G8 FLAT WASHER
33	4	WSH58LOCKG8	5/8" G8 LOCK WASHER
34	4	WSH916LOCK	9/16" LOCK WASHER

DRIVELINE ASSEMBLIES

MON901049-1 4600 HYDRO PUMP ASSEMBLY

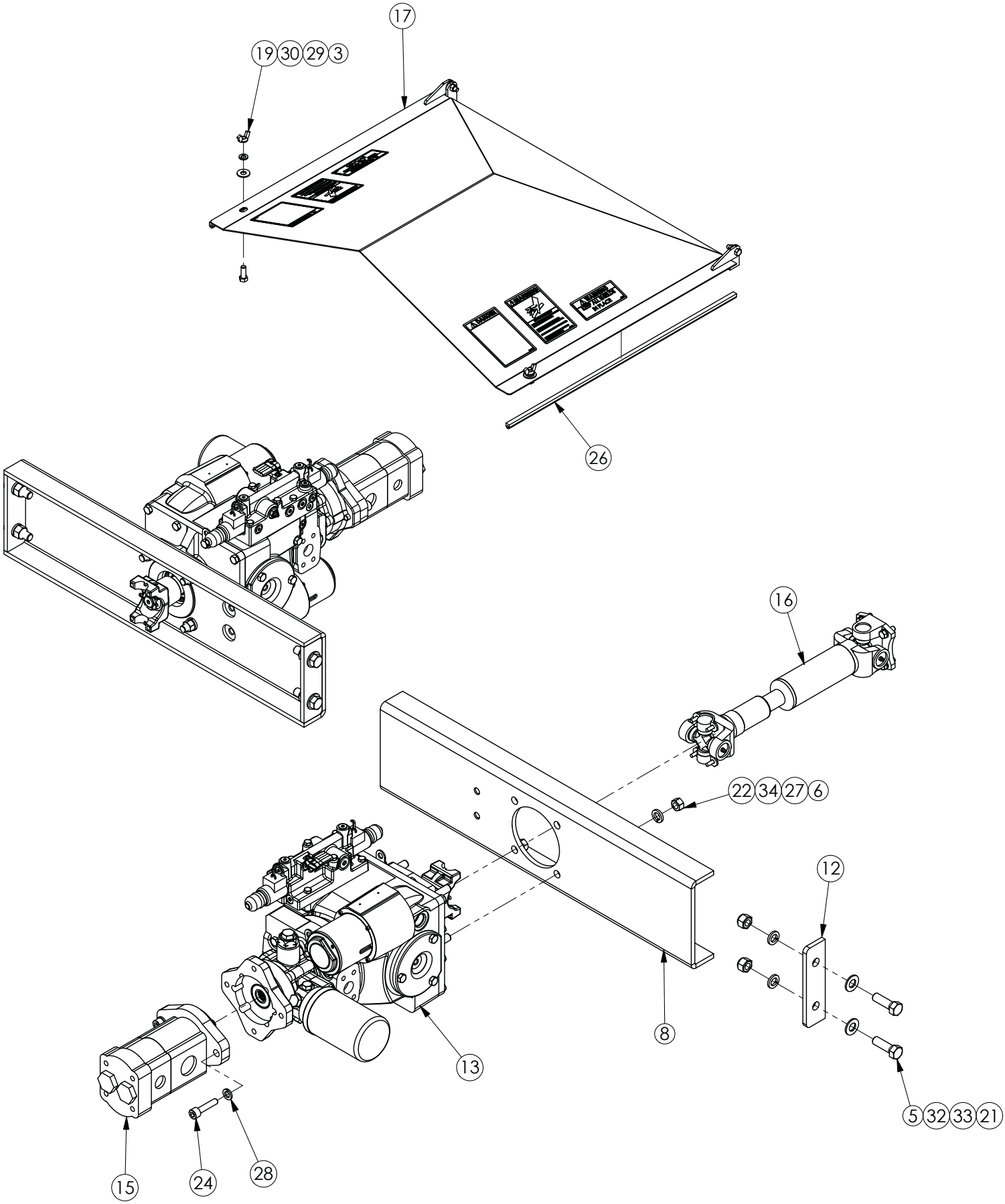

MON900992 HYDRO DRIVE ASSEMBLY

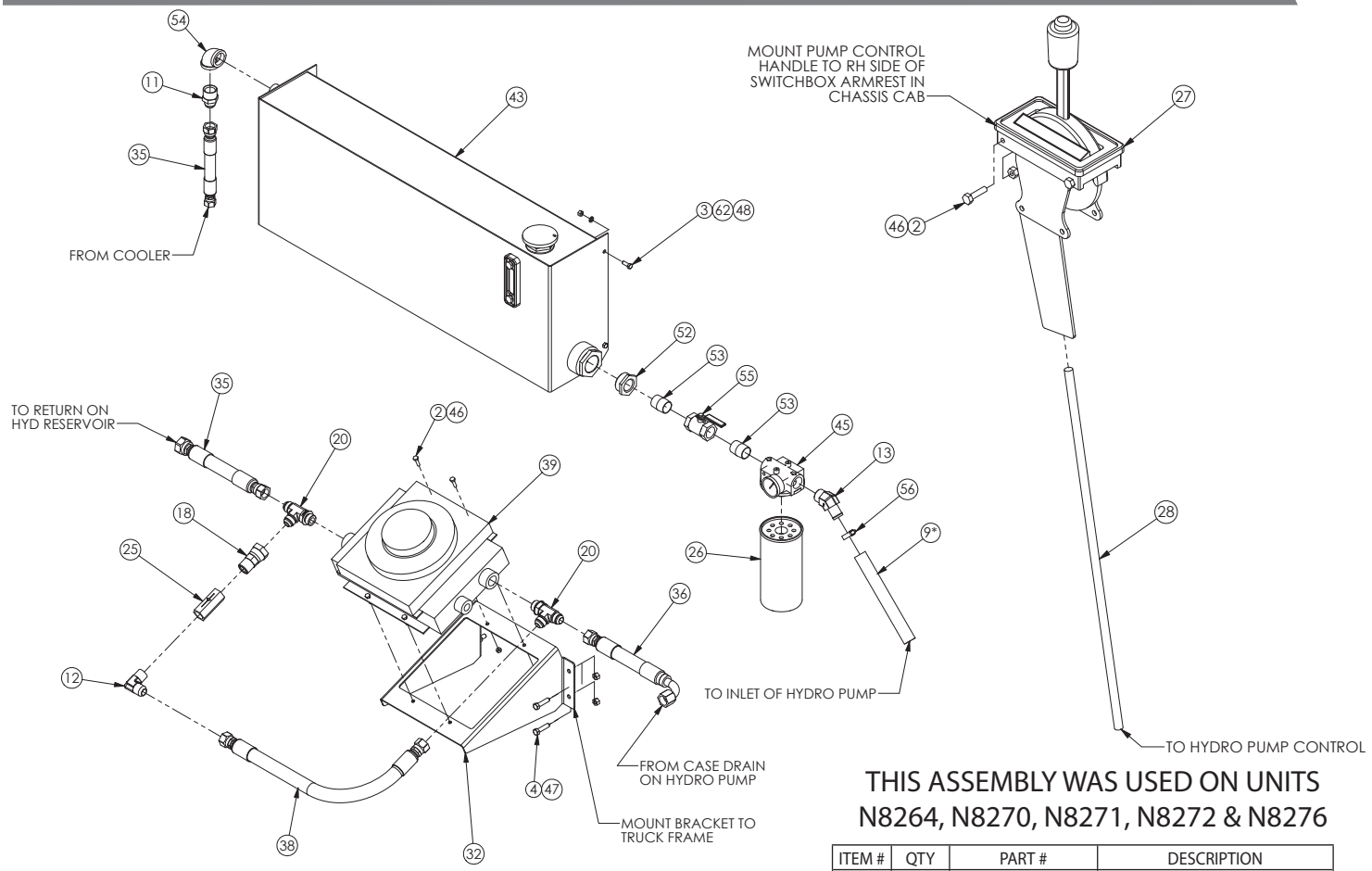

THIS ASSEMBLY WAS USED ON UNITS
N8264, N8270, N8271, N8272 & N8276

ITEM #	QTY	PART #	DESCRIPTION
1	4	BLT12X112NCG8	1/2X1-1/2 NC G8 BOLT
2	6	BLT14X1NC	1/4X1 BOLT
3	8	BLT38X1NC	3/8X1 BOLT
4	4	BLT38X112NC	3/8X1-1/2 BOLT
5	4	BLT58X2NCG8	5/8X2 NC G8 BOLT
6	2	BLT516X34NC	5/16X3/4 BOLT
7	4	BLT916X2NF	9/16X2 G8 FINE THRD BOLT
8	4	HYD16SFO	SPLIT FLANGE
9*	225	HYD114SUCHOSE	SUCTION HOSE
10	1	HYD1000FLBM	1000 PSI GAUGE
11	1	HYD2404-16-20	ADAPTOR
12	1	HYD2501-12-12	ADAPTOR
13	1	HYD4503-20	45 DEGREE HOSE ADAPTOR
14	1	HYD4603-20-16	ELBOW ADAPTOR
15	1	HYD5406-8-4	ADAPTOR
16	2	HYD6400-12-12	ADAPTOR
17	1	HYD6431MOD	MOTOR
18	1	HYD6505-12-12	UNION ADAPTOR
19	1	HYD6801-12-12	ELBOW ADAPTOR
20	2	HYD6804-12-12	TEE ADAPTOR
21	1	HYD6805-08-08	ELBOW ADAPTOR
22	2	HYD6890-16-16	SPLIT FLANGE ADAPTOR
23	1	HYD6900-4-4	UNION ADAPTOR
24	1	HYD10000FLBM	PRESSURE GAGE
25	1	HYDPCFC1200S65	CHECK VALVE
26	1	HYDR750H0806	FILTER
27	1	KN172947	CONTROL LEVER
28	1	KN172948	CONTROL CABLE
29	1	MON101479	HYDRO MOUNT
30	1	MON101669	PUMP HOOD
31	-1	MON101896	PLANETARY
32	1	MON102477	COOLER MOUNT
33	2	MON104152	CHANNEL MOUNT

ITEM #	QTY	PART #	DESCRIPTION
34	1	MON104181	PLANETARY
35	1	MON701037	HYDRAULIC HOSE
36	1	MON701039	HYDRAULIC HOSE
37*	1	MON701566	HYDRAULIC HOSE
38	1	MON701567	HYDRAULIC HOSE
39	1	MON800349	OIL COOLER
40*	2	MON800442	HYDRAULIC HOSE
41	1	MON800450	PUMP
42	1	MON800452	BALL JOINT
43	1	MON900397	HYDRAULIC TANK
44	1	MON900420	HYDRO DRIVELINE
45	1	MON900947	FILTER HEAD ASSEMBLY
46	6	NUT14LOCKNC	1/4" LOCK NUT
47	4	NUT38LOCKNC	3/8" LOCK NUT
48	4	NUT38NC	3/8" NUT
49	4	NUT38WING	3/8" WING NUT
50	4	NUT58LOCKNCG8	GRADE 8 5/8" NC LOCK NUT
51	4	NUT916LOCKNF	9/16" FINE THRD LOCK NUT
52	1	PFBL2X114BUS	BUSHING
53	2	PFBL114CLNIP	1-1/4" CLOSE NIPPLE
54	1	PFBL11490EL	1-1/4" 90 DEG ELBOW
55	1	PFBR114BVALVE	1-1/4" BRASS BALL VALVE
56	2	SPCH125	HOSE CLAMP
57	280	STI700221	#46 HYDRAULIC OIL
58	1	VM100328	HYDRO LEVER
59	4	WSH12FLATG8	1/2" G8 FLAT WASHER
60	4	WSH12LOCKG8	1/2" G8 LOCK WASHER
61	2	WSH14LOCK	1/4" LOCK WASHER
62	8	WSH38LOCK	3/8" LOCK WASHER
63	4	WSH58FLATG8	5/8" G8 FLAT WASHER
64	4	WSH58LOCKG8	5/8" G8 LOCK WASHER
65	4	WSH516FLAT	5/16" FLAT WASHER
66	2	WSH516LOCK	5/16" LOCK WASHER
67	4	WSH916LOCK	9/16" LOCK WASHER

MON900992 HYDRO DRIVE ASSEMBLY

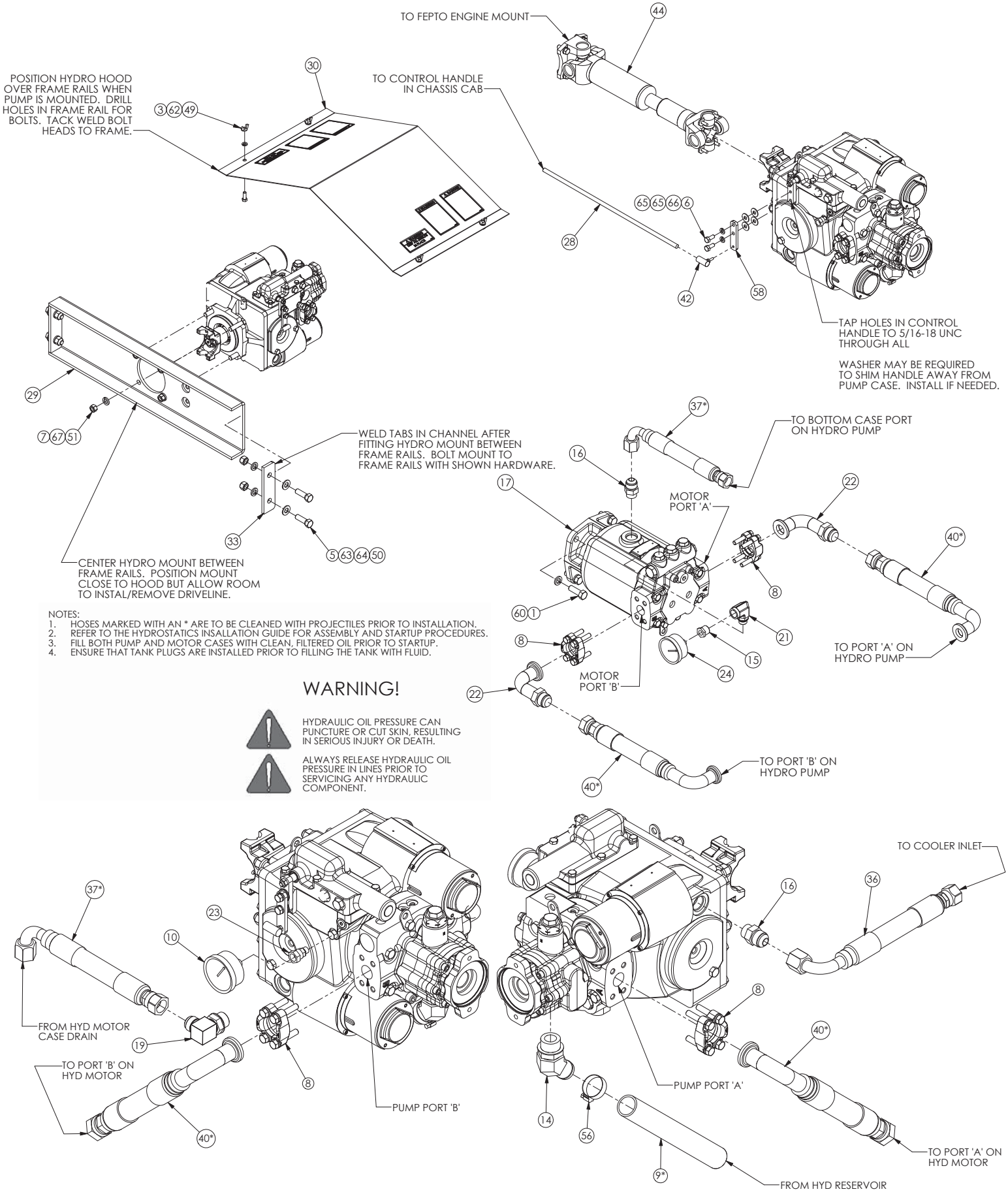

MON800398 SHEAR YOKE

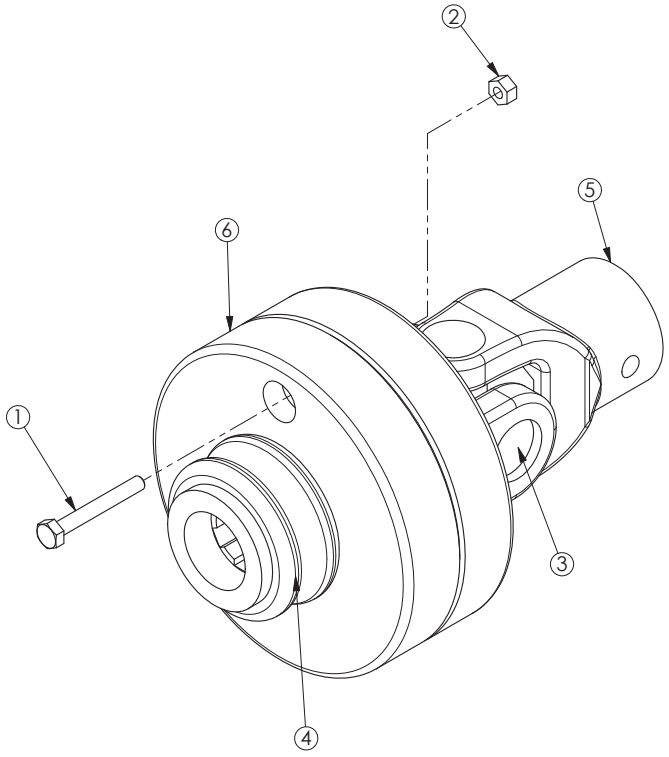

ITEM #	QTY	PART #	DESCRIPTION
1	1	BLT14X2NC	1/4X2 BOLT
2	1	NUT14LOCKNC	1/4" LOCK NUT
3	1	PTO22275	PTO CROSS KIT
4	1	PTO2610015	SLIDE LOCK REPAIR KIT
5	1	PTO350112450	YOKE
6	1	PTO4030005	SHEAR BALL ASSEMBLY

4600 TRUCK GENERAL SPECIFICATIONS

Width: Mixing Chamber ..... 92" (234 cm)
Overall ..... 99" (251 cm)

Length: Mixing Chamber ..... 216" (549 cm)
Overall ..... 239" (607 cm)

Height: (On 38" Frame) ..... 114" (274 cm)

Capacity ..... 630 cu/ft (17.84 cu/m)
(Struck Level) ..... 506 bushels

Unit Weight ..... 16,600 lbs. (7530 Kg)

Bottom Section ..... 5/16 Steel Plate

Upper Sides ..... 3/16 Steel Plate

Front/Rear Panels ..... 1/4 Steel Plate

Discharge (Left Side of Mixer) ..... 40" Discharge
3 Auger Power ..... 31", 39", & 48" Lengths
Chain Slat ..... 34", 39" & 48" Lengths

Drive ..... Planetary Drive (18:1)
Oilbath Roller Chain

Minimum Horsepower Requirement ..... 110 hp (82 Kw)

SAC75999 DS TRUCK REMOTE SCALE KIT

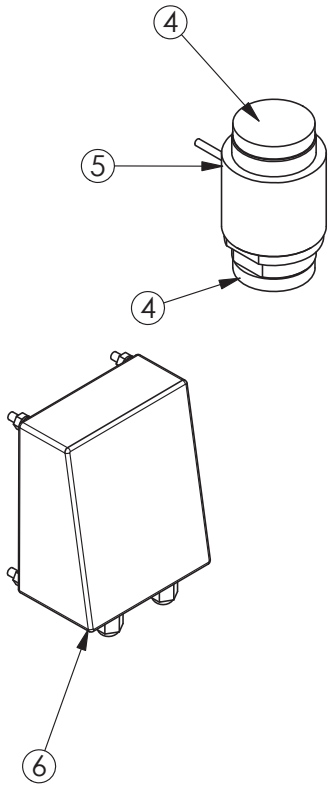

NOTE:
SCALE POWER HARNESS AND JUNCTION BOX CABLE SCA170008 AND SCA170053 ARE CONTAINED WITHIN CONTROL CONSOLE KITS.

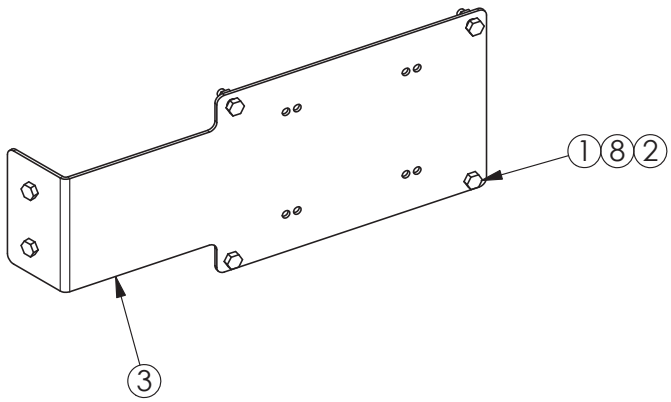

ITEM #	QTY	PART #	DESCRIPTION
1	10	BLT14X34NC	1/4X3/4 BOLT
2	10	NUT14NC	1/4" NUT
3	1	SCA170026	REMOTE INDICATOR BRACKET
4	8	SCA170030	LOADCELL SHIM
5	4	SCA403275	30K LOADCELL
6	1	SCA404930	JUNCTION BOX
7	30	SPCABLETIEMED	CABLE TIE
8	10	WSH14LOCK	1/4" LOCK WASHER

MON900475 LIGHT KIT

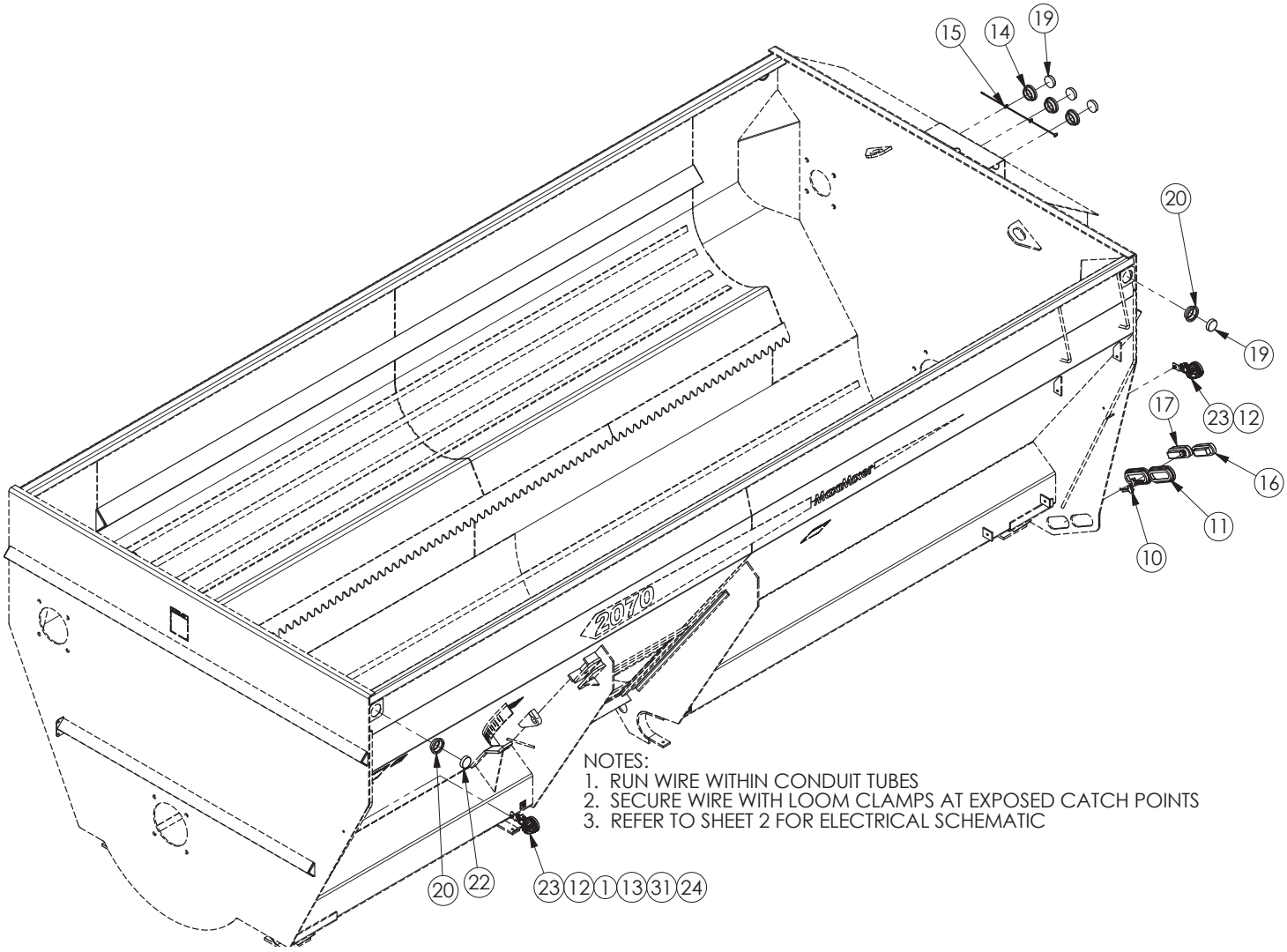

ITEM #	QTY	PART #	DESCRIPTION
1	2	BLT516X34NC	5/16X3/4 BOLT
2	7	JES31034	16/14 MALE WEATHERPACK TERMINAL
3	7	JES31035	16/14 FEMALE WEATHERPACK TERMINAL
4	1	JES38042	2 SHROUD WEATHERPACK CONNECTOR
5	1	JES38043	2 TOWER WEATHERPACK CONNECTOR
6	1	JES38048	6 SHROUD WEATHERPACK CONNECTOR
7	1	JES38049	6 TOWER WEATHERPACK CONNECTOR
8	14	JES39001	14GA WEATHERPACK CABLE SEAL
9	2	JES39010	WEATHERPACK CAVITY PLUG
10	4	KN174724	LIGHT CONNECTOR
11	4	KN174725	OVAL LIGHT GROMMET
12	2	MON104325	BUNK LIGHT BRACKET
13	2	NUT516NC	5/16" NUT
14	3	SPB14318	2-1/2" GROMMET
15	1	SPB15049	LIGHT CONNECTOR

ITEM #	QTY	PART #	DESCRIPTION
16	2	SPM821C7	CLEAR BACKUP LIGHT
17	2	SPM821R7	RED STOP LIGHT
18	48	STI14SHRINK	1/4" HEAT SHRINK TUBE
19	5	STI700148	RED CLEARANCE LIGHT
20	4	STI700193	ROUND LIGHT GROMMET
21	6	STI700200	LOOM CLAMP
22	2	STI700921	AMBER CLEARANCE LIGHT
23	2	STI704343	WORK FLOOD LIGHT
24	2	STI704503	DEUTSCH WIRE HARNESS
25	700	STIWIRE14PR01	14GA BLACK WIRE
26	500	STIWIRE14PR02	14GA RED WIRE
27	500	STIWIRE14PR05	14GA YELLOW WIRE
28	700	STIWIRE14PR06	14GA BROWN WIRE
29	600	WTIWIRE14PR38	14GA WHITE WIRE
30	600	STIWIRE14PR39	14GA GREEN WIRE
31	2	WSH516LOCK	5/16" LOCK WASHER

MON900475 LIGHT KIT

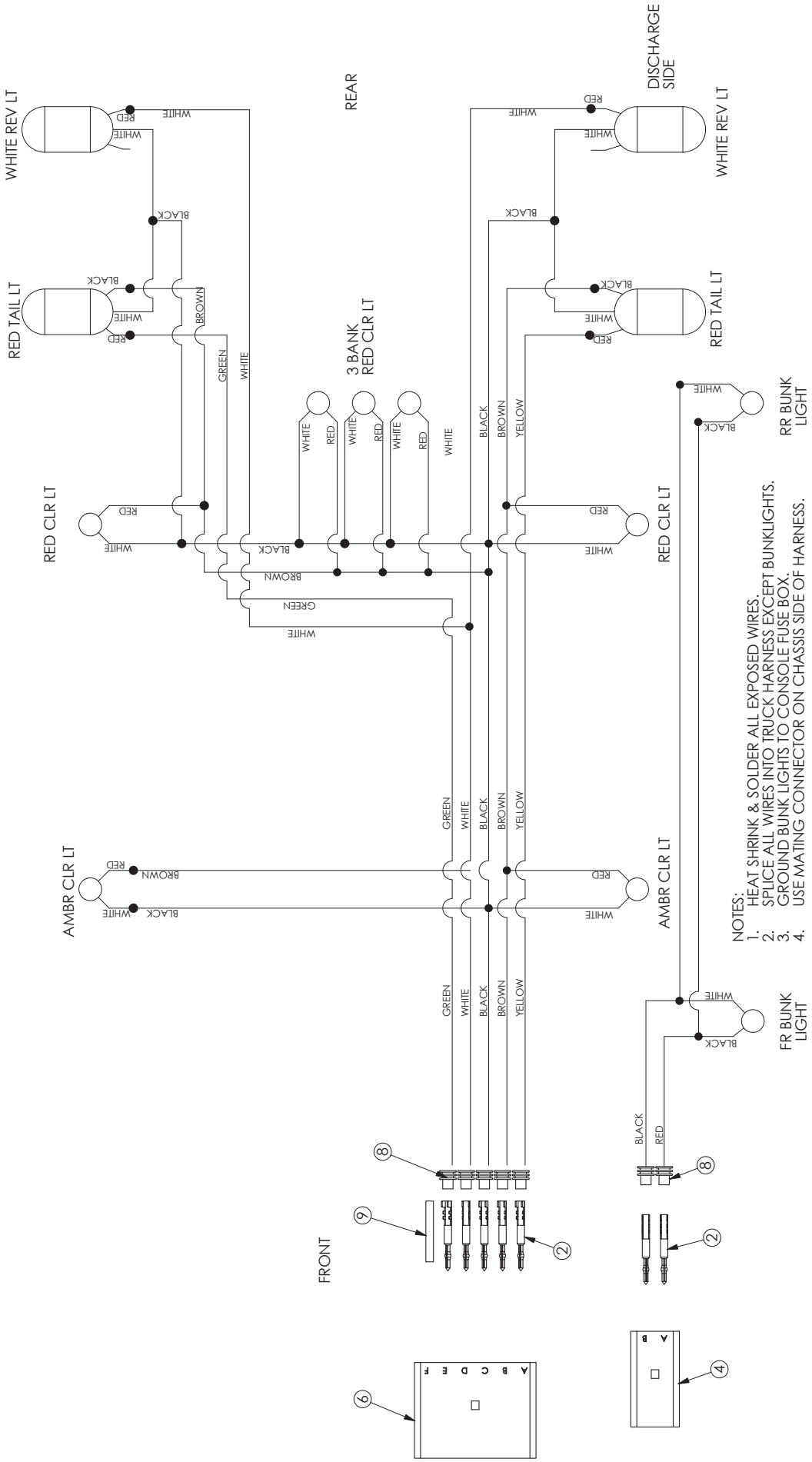

REAR BUMPER OPTIONS

MON900876 HEAVY DUTY REAR BUMPER

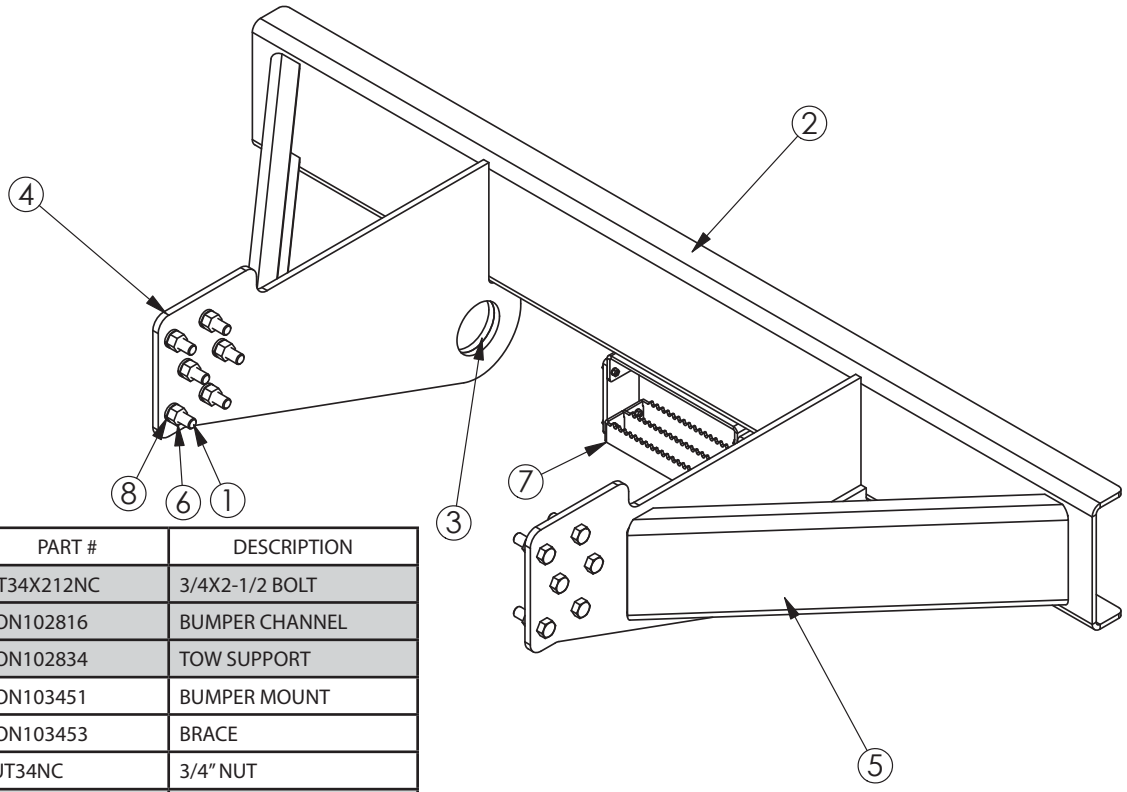

ITEM #	QTY	PART #	DESCRIPTION
1	12	BLT34X212NC	3/4X2-1/2 BOLT
2	1	MON102816	BUMPER CHANNEL
3	2	MON102834	TOW SUPPORT
4	2	MON103451	BUMPER MOUNT
5	2	MON103453	BRACE
6	12	NUT34NC	3/4" NUT
7	1	STI593511	BOLT ON STEP KIT
8	12	WSH34LOCK	3/4" LOCK WASHER

MON900877 STANDARD REAR BUMPER

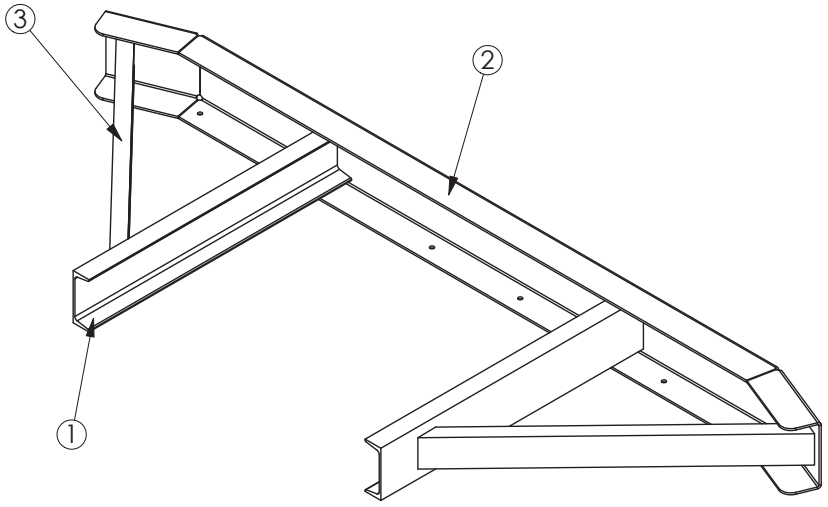

ITEM #	QTY	PART #	DESCRIPTION
1	2	MON101238	BUMPER MOUNT
2	1	SAC35333	BUMPER
3	2	SAC35528	BUMPER SUPPORT

FRONT BUMPER OPTIONS

SAC56058 ROLLER FRONT BUMPER

ITEM #	QTY	PART #	DESCRIPTION
1	4	BLT12X412NC	1/4X4-1/2 BOLT
2	6	BLT34X212NC	3/4X2-1/2 BOLT
3	1	BLT38X114NC	3/8X1-1/4 BOLT
4	6	NUT34NC	3/4" NUT
5	1	NUT38NC	2/8" NUT
6	1	SAC30153	1-1/2 PIPE X 48
7	1	SAC56071	ROLLER ASSEMBLY
8	1	SAC56073	BUMPER
9	4	WSH12FLAT	1/2" FLAT WASHER
10	6	WSH34LOCK	3/4 LOCK WASHER

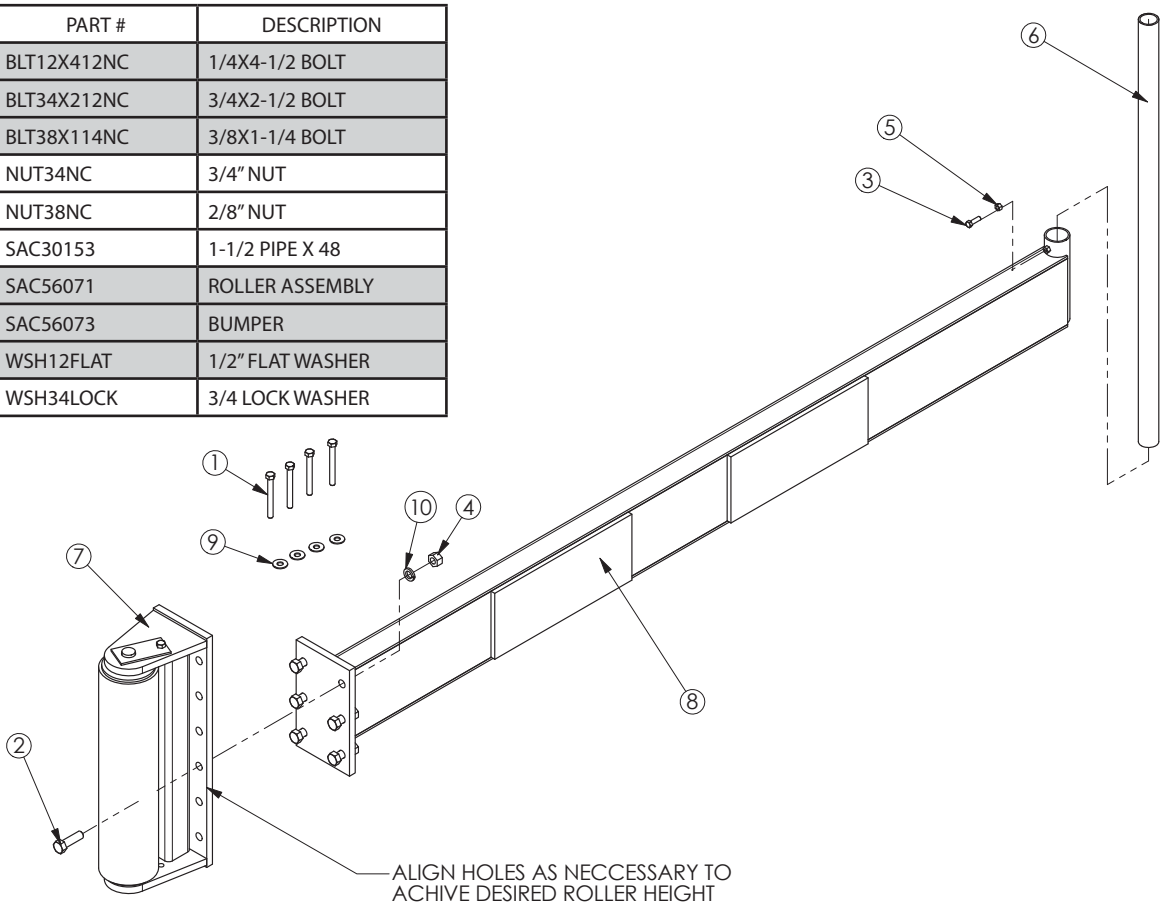

SAC56078 EXTENSION FRONT BUMPER

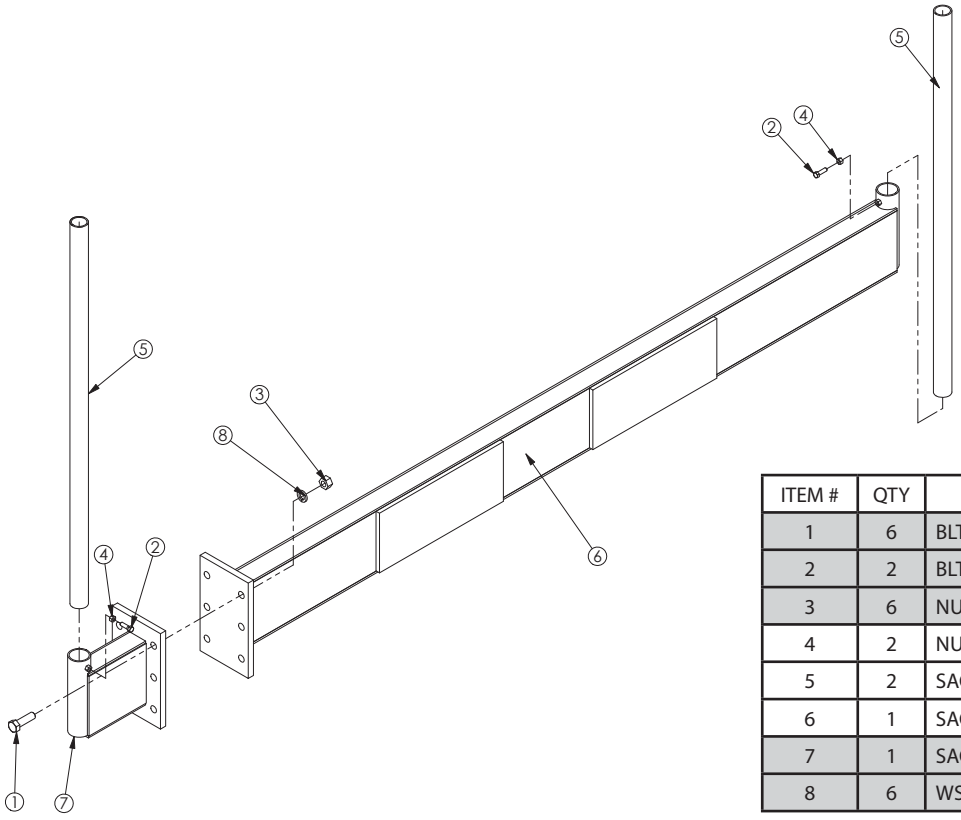

ITEM #	QTY	PART #	DESCRIPTION
1	6	BLT34X212NC	3/4X2-1/2 BOLT
2	2	BLT38X114NC	3/8X1-1/4 BOLT
3	6	NUT34NC	3/4" NUT
4	2	NUT38NC	3/8" NUT
5	2	SAC30153	1-1/2 PIPE X 48
6	1	SAC56073	BUMPER
7	1	SAC56081	BUMPER EXTENSION
8	6	WSH34LOCK	3/4" LOCK WASHER

FENDER OPTIONS

MON900979 TANDEM FENDER KIT

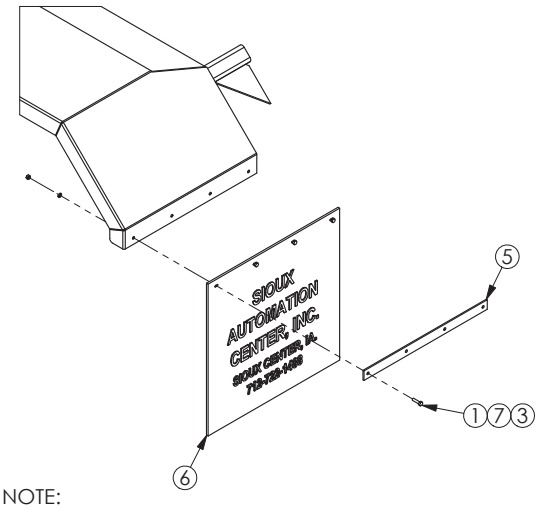

NOTE:
INSTALL CUT OFF PORTION OF
MUDFLAP TO FRONT SIDE OF FENDER.

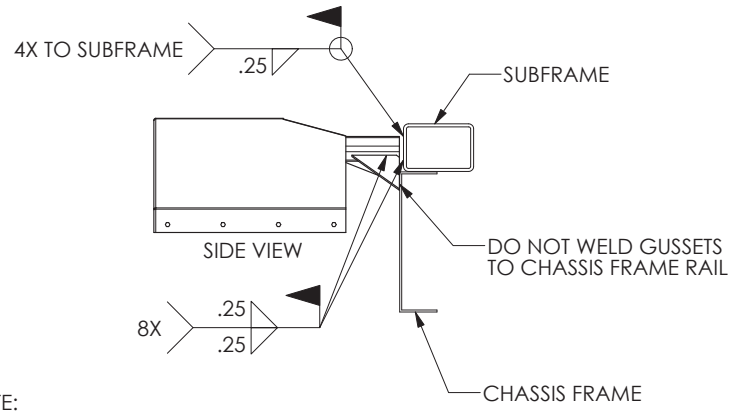

NOTE:
1.) GUSSETS ARE SHIPPED LOOSE.
2.) CUT TUBES AND GUSSETS TO FIT APPLICATION.
3.) PAINT WELDED PARTS BLACK AFTER ASSEMBLY.

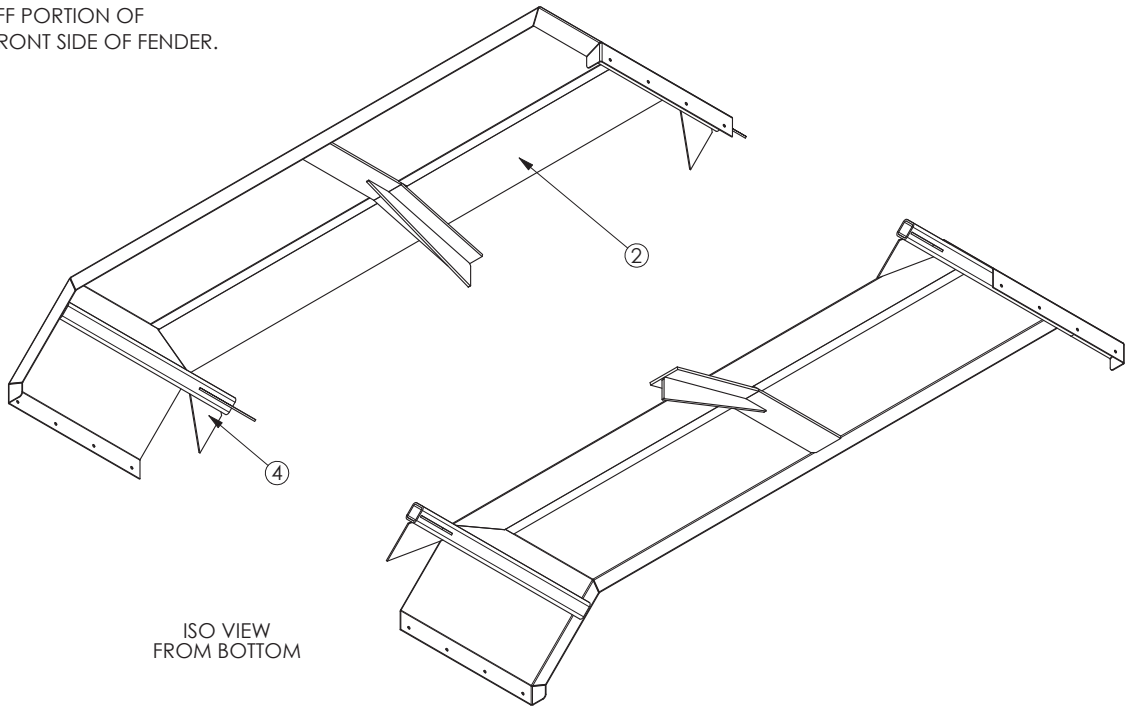

ISO VIEW
FROM BOTTOM

ITEM #	QTY	PART #	DESCRIPTION
1	16	BLT516X114NC	5/16X1-1/4 BOLT
2	2	MON701560	TANDEM FENDER WELDMENT
3	16	NUT516NC	5/16" NUT
4	8	RP100021	GUSSET
5	4	SAC56009	MUD FLAP STRAP
6	1	SACFLAP24X36	MUD FLAP
7	16	WSH516LOCK	5/16" LOCK WASHER

FENDER OPTIONS

MON900988 TANDEM POLY FENDER KIT

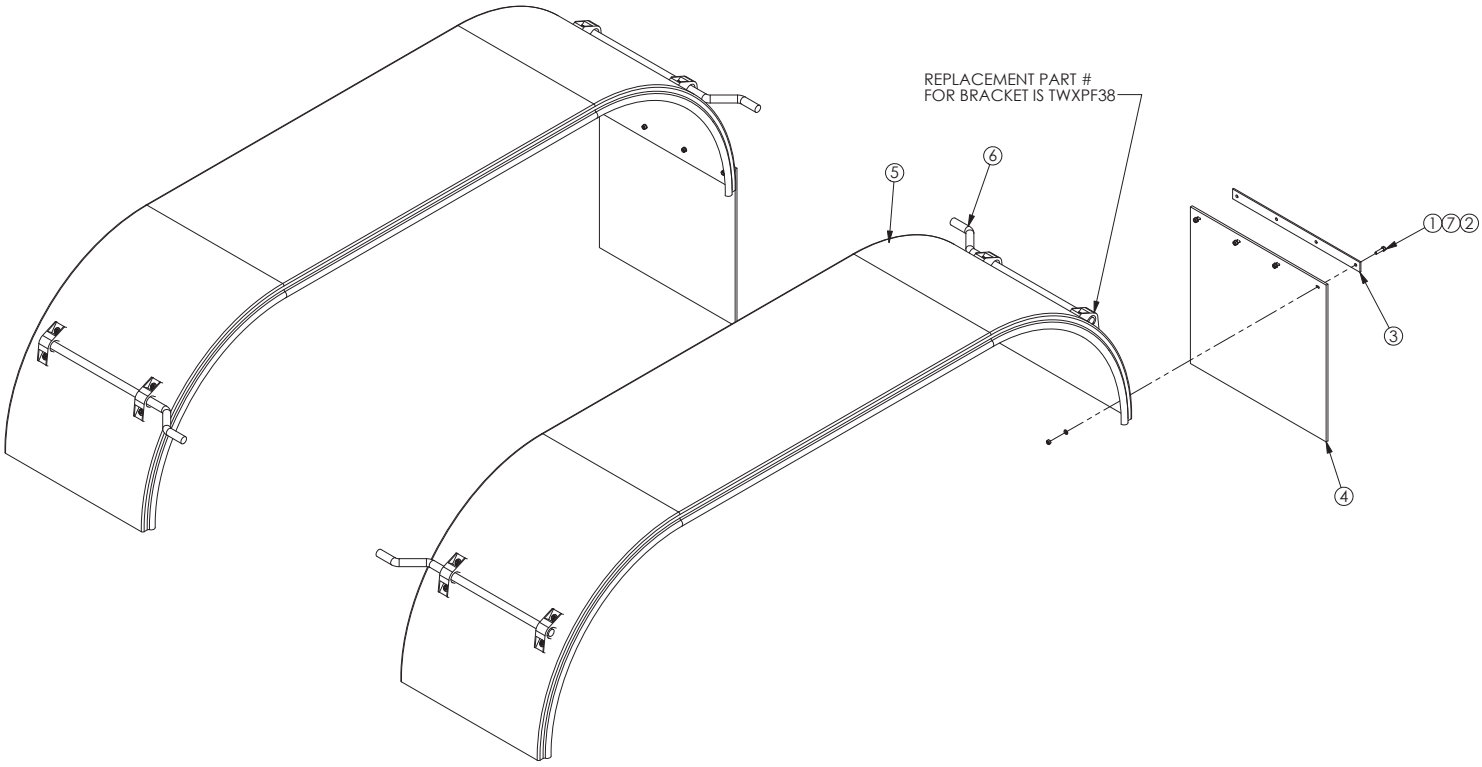

ITEM #	QTY	PART #	DESCRIPTION
1	8	BLT516X114NC	5/16X1-1/4 BOLT
2	8	NUT516NC	5/16" NUT
3	2	SAC56009	MUD FLAP STRAP
4	1	SACFLAP24X36	MUD FLAP
5	2	TWJHT650	TANDEM POLY FENDER
6	2	TWKIT1	TANDEM FENDER HARDWARE KIT
7	8	WSH516LOCK	5/16" LOCK WASHER

FENDER OPTIONS

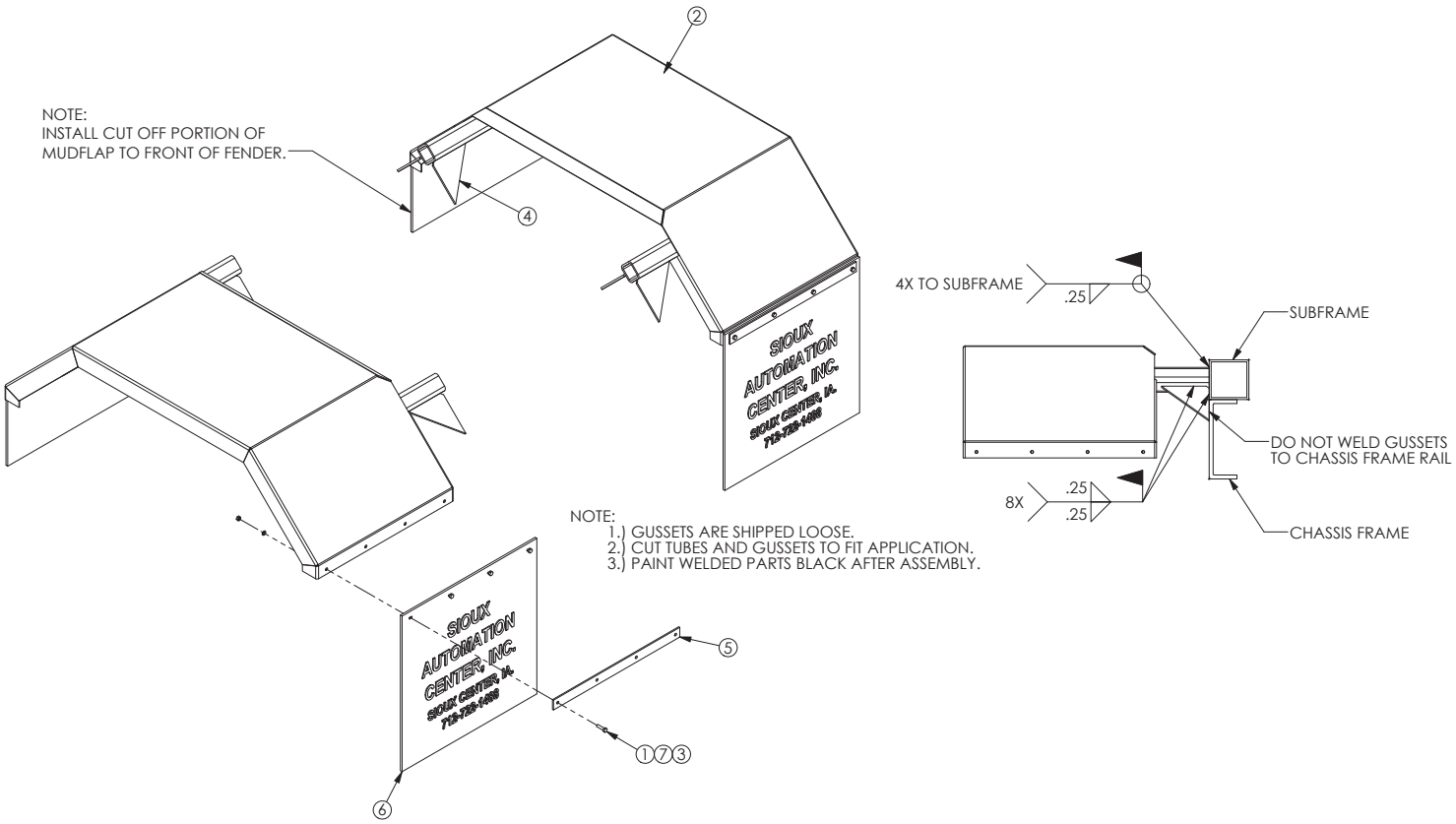

ITEM #	QTY	PART #	DESCRIPTION
1	16	BLT516X114NC	5/16X1-1/4 BOLT
2	2	MON701562	SINGLE FENDER WELDMENT
3	16	NUT516NC	5/16" NUT
4	8	RP100021	GUSSET
5	4	SAC56009	MUD FLAP STRAP
6	1	SACFLAP24X36	MUD FLAP
7	16	WSH516LOCK	5/16" LOCK WASHER

FENDER OPTIONS

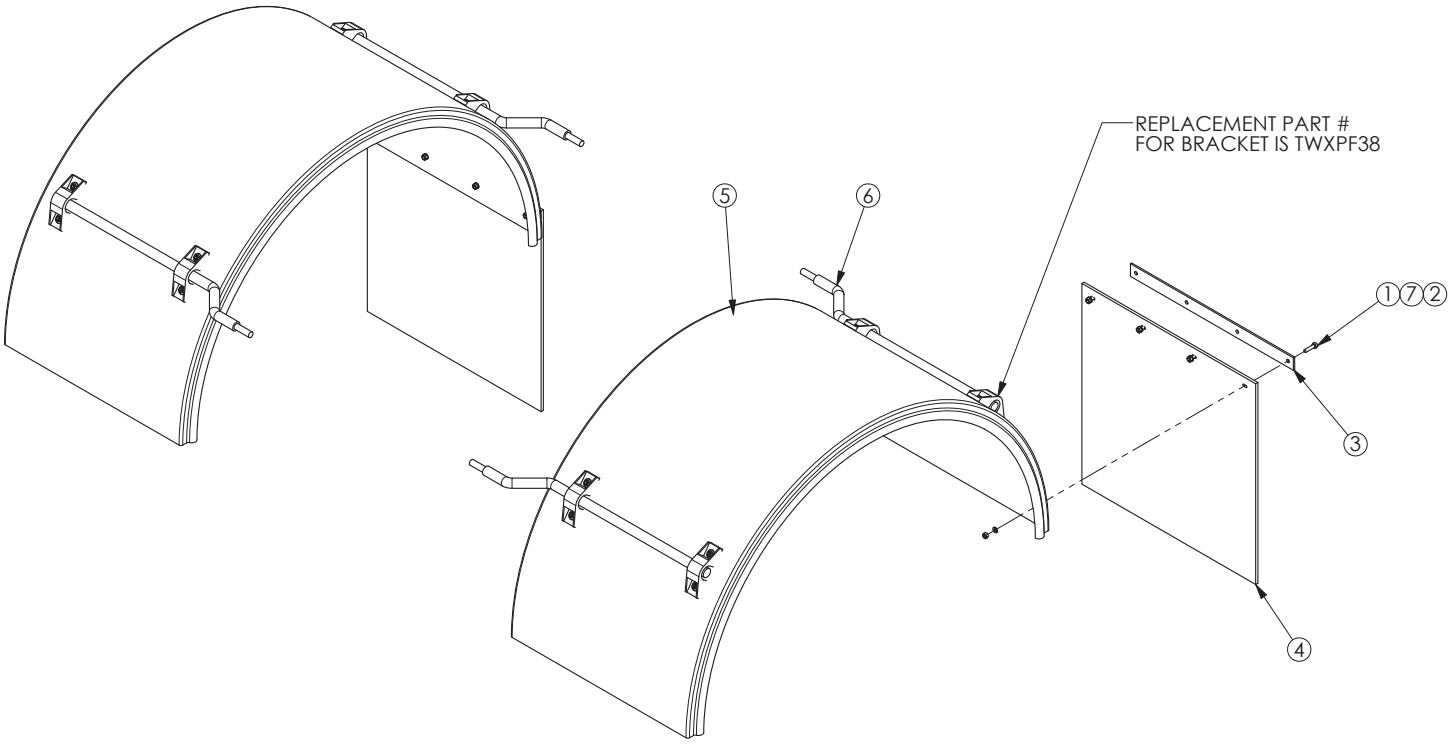

ITEM #	QTY	PART #	DESCRIPTION
1	8	BLT516X114NC	5/16X1-1/4 BOLT
2	8	NUT516NC	5/16" NUT
3	2	SAC56009	MUD FLAP STRAP
4	1	SACFLAP24X36	MUD FLAP
5	2	TWHL43A	SINGLE POLY FENDER
6	2	TWKIT#3	SINGLE FENDER HARDWARE KIT
7	8	WSH516LOCK	5/16" LOCK WASHER

WARRANTY

SIOUX AUTOMATION CENTER, INC.(Hereafter noted as SAC) warrants to the original purchaser of a new SAC product from an authorized SAC dealer that the product and the components thereof manufactured by SAC are free from defects in material and workmanship at the time of shipment. SAC further warrants to such purchaser that each new SAC product will perform without structural or operational failure, if the product is assembled and mounted in accordance with SAC's instruction and drawings, and is then operated and maintained as described in the Owner's Manual.

WARRANTY PERIOD

The above warranty on materials and workmanship shall be effective for a period of three years on weighbars/loadcells, and one year on material and workmanship of all other components. The warranty period shall be effective from the date of delivery by the SAC dealer to the initial purchaser.

PURCHASER'S REMEDIES

If a warranted SAC product or component fails to conform to the above warranty during the warranty period, SAC will furnish the parts and labor at the factory or authorized dealer necessary to correct such failure, provided SAC is notified through the selling representative within 30 days of the discovery of the failure. All warranty submissions must include the original part in question, along with a properly filled out warranty claim sheet, before a warranty award will be made. Labor at the factory or dealer is specified as labor done at the SAC factory or SAC authorized dealer ONLY! SAC will pay the common carrier freight expense of parts to and from the owner. Faster freight service is available, with the owner paying the difference in cost between common carrier and preferred method by owner. Freight of whole goods to or from the factory is the owner's expense, regardless if they fail under warranty or not. All warranty decisions will be final!

EXCLUSIONS

This warranty shall not apply to component parts or accessories of products not manufactured by SAC and which carry the warranty of the manufacturer thereof. Items of high wear and regular maintenance shall not be covered under this warranty. This warranty shall be void if any part or parts not manufactured by SAC are used either in maintaining or servicing of the products covered by this warranty. No warranty whatsoever is made on used, secondhand, altered, or rebuilt machinery.

THE OWNERS WARRANTY REGISTRATION MUST BE RECEIVED BY SAC OR AN AUTHORIZED SAC DEALER WITHIN 30 DAYS OF DELIVERY OR ALL WARRANTY IS NULL AND VOID.

THIS WARRANTY IS EXTENDED ONLY TO THE INITIAL PURCHASER FROM AN AUTHORIZED SAC DEALER AND MAY NOT BE REASSIGNED. THIS WARRANTY IS EXPRESSLY IN LIEU OF ANY OTHER WARRANTIES EXPRESSED OR IMPLIED, INCLUDING ANY IMPLIED WARRANTIES OF MERCHANTABILITY OR FOR A PARTICULAR PURPOSE AND SAC NEITHER ASSUMES OR AUTHORIZES ANY OTHER PERSON TO ASSUME FOR IT ANY OTHER LIABILITY. THERE ARE NO WARRANTIES WHICH EXTEND BEYOND THE DESCRIPTION ON THE FACE THEREOF.

We reserve the right to make improvements to any of our products without notice or obligation regarding models previously sold.

SIOUX AUTOMATION CENTER, INC.

SCALE WARRANTY

All scale equipment will be warrantied under the original manufacture warranty. However, SIOUX AUTOMATION CENTER, INC.(Hereafter noted as SAC.) warrants to the original purchaser a LIFETIME LABOR WARRANTY on Weigh Tronix and Digi-Star scale and remote indicators. The terms of warranty are:

LIFETIME - From date of sale to the Original Purchaser: All labor needed to repair the original Weigh Tronix and Digi-Star scale and remote indicators.

This warranty, as described above, is expressly limited to the labor needed to repair the scale indicator and the remote indicators and does not cover the costs of any parts that may be needed for the indicators repair. All scale indicator labor will be performed at the SAC factory. Any labor performed outside of the SAC factory will not be covered under this warranty. All warranty decisions will be final!

This warranty does not cover the cost of labor, parts or transportation charges when any party other than SAC performs the replacement or repair of parts claimed to be defective, nor shall this warranty apply to an SAC product upon which any alterations or repairs other than normal maintenance have been made without the written approval of SAC.

SAC shall in no event be liable for consequential damages, lost profits or contingent liabilities arising out of the failure of any SAC product or parts to operate properly.

WARRANTY CARD MUST BE FILLED OUT AND RETURNED TO FACTORY IMMEDIATELY UPON RECEIPT OF EQUIPMENT TO INSURE WARRANTY COVERAGE.

THIS WARRANTY IS EXTENDED ONLY TO THE INITIAL PURCHASER FROM AN AUTHORIZED SAC DISTRIBUTOR AND MAY NOT BE REASSIGNED. THIS WARRANTY IS EXPRESSLY IN LIEU OF ANY OTHER WARRANTIES EXPRESSED OR IMPLIED, INCLUDING ANY IMPLIED WARRANTIES OF MERCHANTABILITY OR FOR A PARTICULAR PURPOSE AND SAC NEITHER ASSUMES OR AUTHORIZES ANY OTHER PERSON TO ASSUME FOR IT ANY OTHER LIABILITY. THERE ARE NO WARRANTIES, WHICH EXTEND BEYOND THE DESCRIPTION OF THE FACE HEREOF.

We reserve the right to make improvements to any of our products without notice or obligation regarding models previously sold.

MAN00963 **Effective 12/12**

SIOUX AUTOMATION CENTER